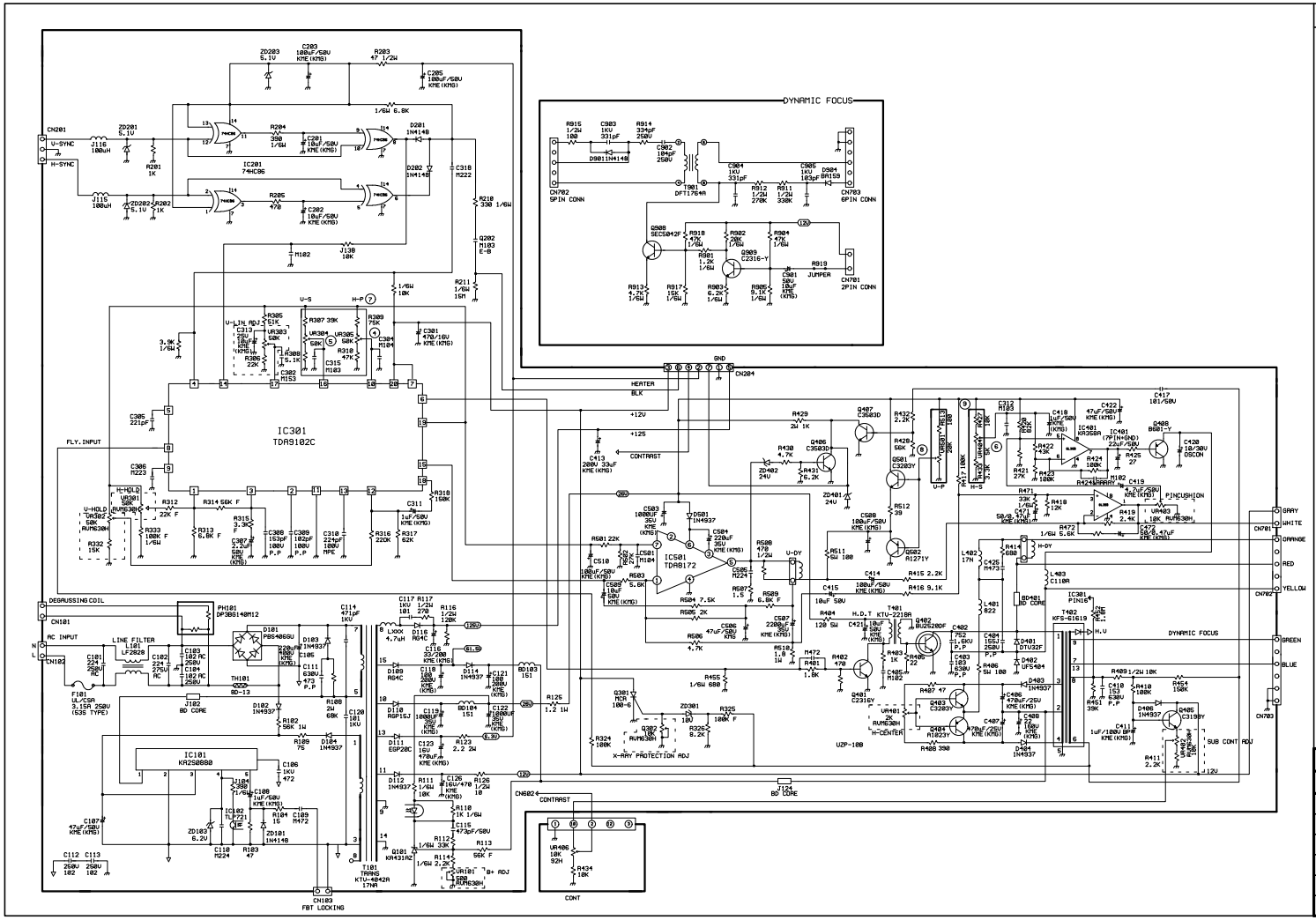

REV	CONTENTS	ECO NO	DATE

KORTEK CORPORATION			
MODEL NAME		KT-1703NA(IGT)	
APPROVALS		PCB NAME	
DRAWN		1.MAIN	
DESIGNED		2.SOCKET	
CHECKED		SUB	
APPROVED		DATE	2000.02.08
DWG.NO		REV. NO	0