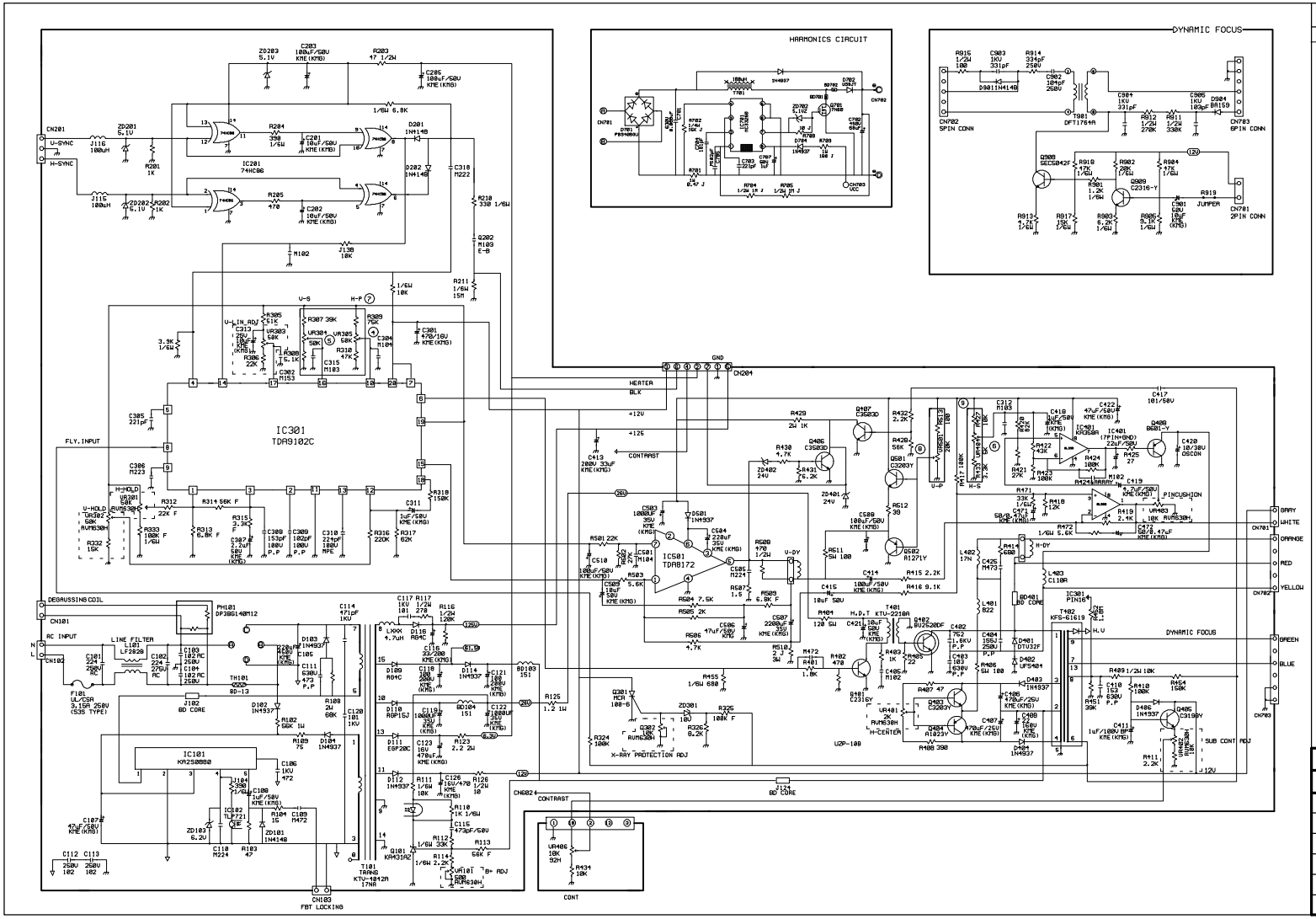

REV	CONTENTS	ECO NO	DATE
1	R510: 2W 2 J-->3W 2 J	ECO0101003	00.01.15

KORTEK CORPORATION			
MODEL NAME		KT-1703NA(IGT)	
APPROVALS		PCB NAME	
DRAWN		1.MAIN	○
DESIGNED		2.SOCKET	
CHECKED		SUB	
APPROVED		DATE	2001.01.15
DWG.NO	KT-1703NA -DC	REV. NO	1