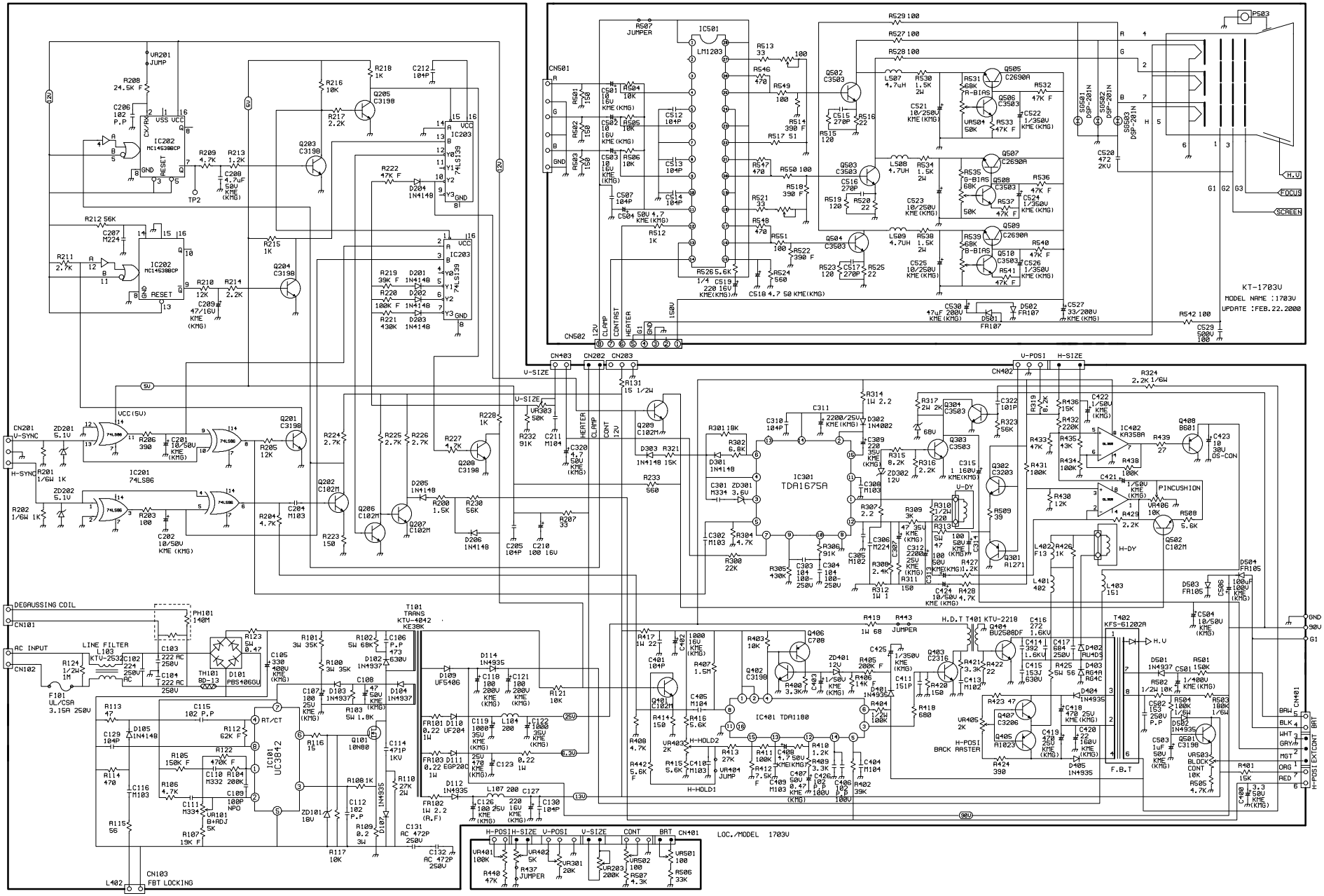
KT-1703V
MODEL NAME :1703V
UPDATE :FEB.22.2000
LOC./MODEL 1703V
IC301 TDA1675A
IC401 TDA1180
IC101 UC3842
T101 TRANS KTU-4042 KE38K
T402 KFS-61202A
F.B.T
H-DY
PINCUSHION
H-POSI BACK RASTER
H-HOLD1
H-HOLD2
DEGAUSSING COIL
AC INPUT
LINE FILTER
FBT LOCKING
H-POSI EXTCONT BAT
H-POSI H-SIZE V-POSI V-SIZE CONT BAT CN401
H.V
FOCUS
SCREEN
G1 G2 G3
GND 90V G1
BRU BLK WHT GRY MGT ORG RED
CN501 CN502 CN403 CN202 CN203 CN402 CN201 CN101 CN102 CN103 CN401
IC201 74LS86
IC202 MC14538BCP
IC203 74LS139
VCC(5V)
V-SYNC H-SYNC
V-SIZE V-POSI H-SIZE
CLAMP CONTRAST HEATER G1 GND 12V 150V
HEATER CLAMP CONT 12V
V-DY
BLOCK CONT
H-POSI
PS03
SG501 DSP-201N
SG502 DSP-201N
SG503 DSP-201N
VR201 JUMP
R507 JUMPER
R419 R443 JUMPER
H.D.T T401 KTU-2210
Q404 BU2508DF
Q301 A1271
Q302 C3203
Q303 C3503
Q304 C3503
Q408 B681
Q502 C102M
Q501 C3198
Q401 C102M
Q402 C3198
Q403 C2316
Q406 C708
Q407 C3206
Q405 A1023
Q201 C3198
Q202 C102M
Q203 C3198
Q204 C3198
Q205 C3198
Q206 C102M
Q207 C102M
Q208 C3198
Q209 C102M
Q101 10N80
Q501 C3198
Q502 C3503
Q503 C3503
Q504 C3503
Q505 C2690A
Q506 C3503
Q507 C2690A
Q508 C3503
Q509 C2690A
Q510 C3503
TP2