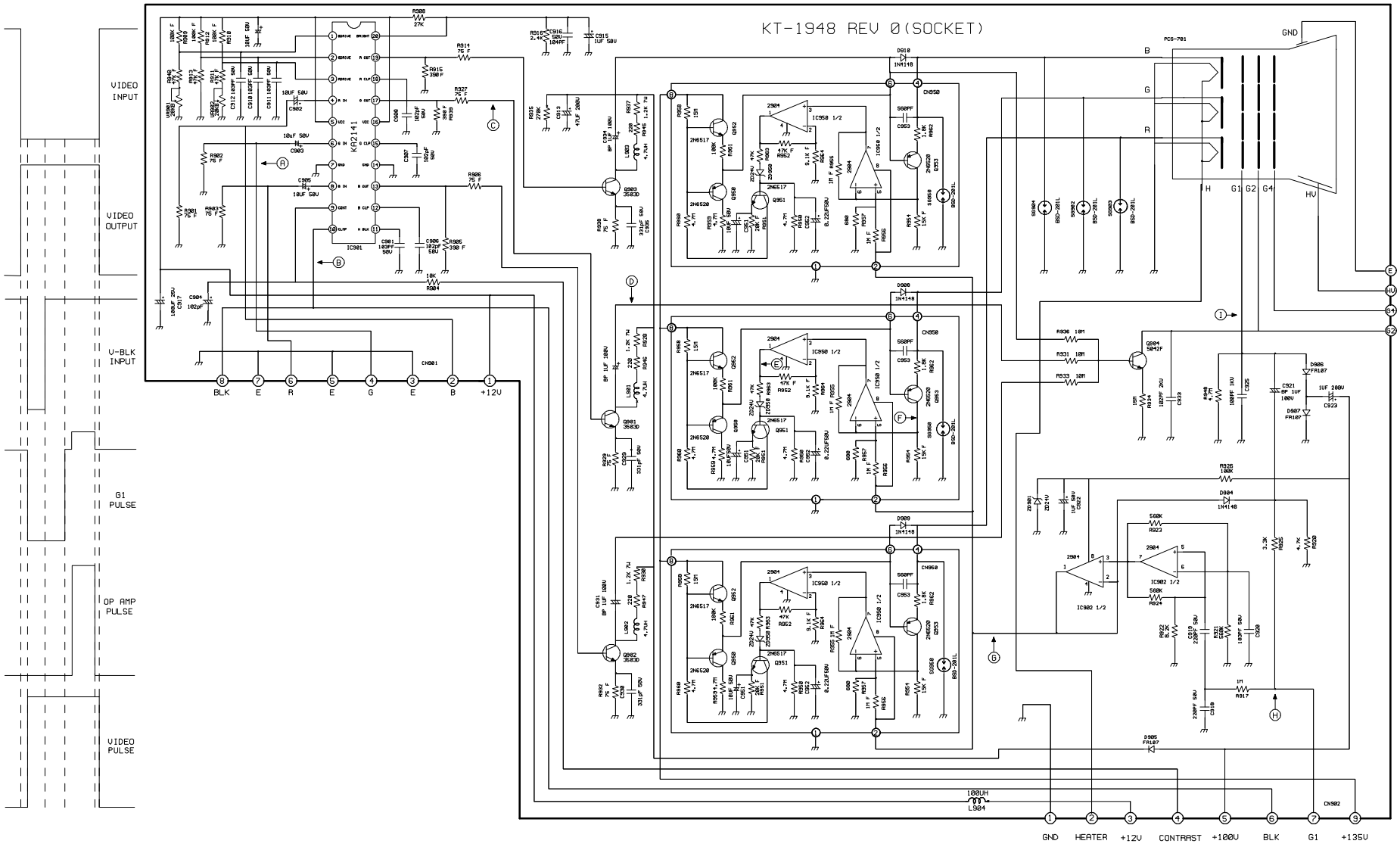
KT-1948 REV 0(SOCKET)
VIDEO INPUT
VIDEO OUTPUT
V-BLK INPUT
G1 PULSE
OP AMP PULSE
VIDEO PULSE
BLK
E
R
E
G
E
B
+12V
GND
HEATER
+12V
CONTRAST
+100V
BLK
G1
+135V
KR2141
IC901
CN901
CN902
CN950
IC950 1/2
IC902 1/2
PCS-701
B
G
R
H
G1
G2
G4
HV
GND
100UH
L904