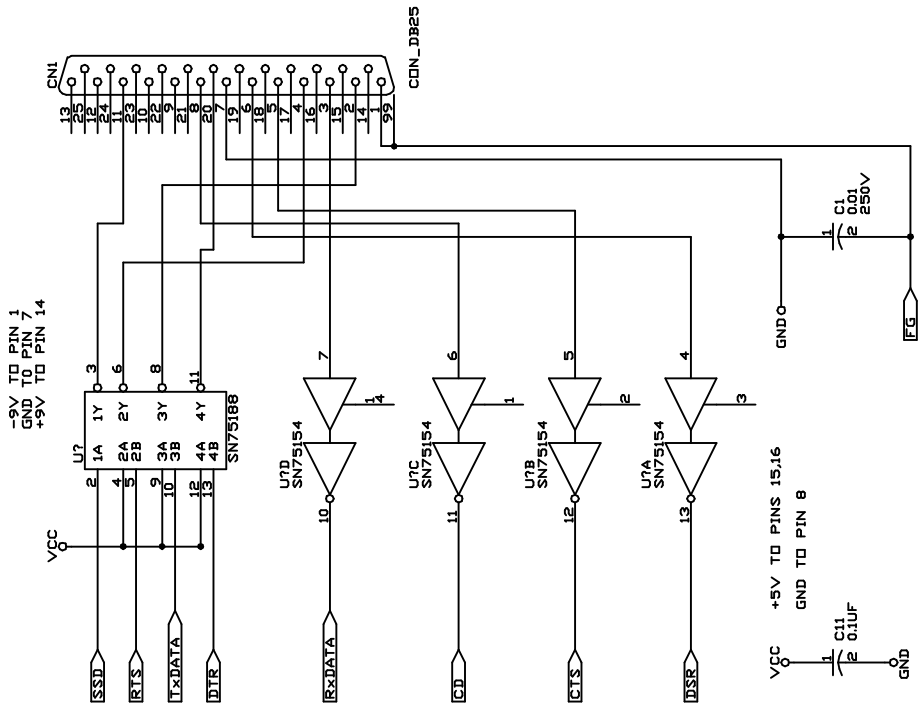

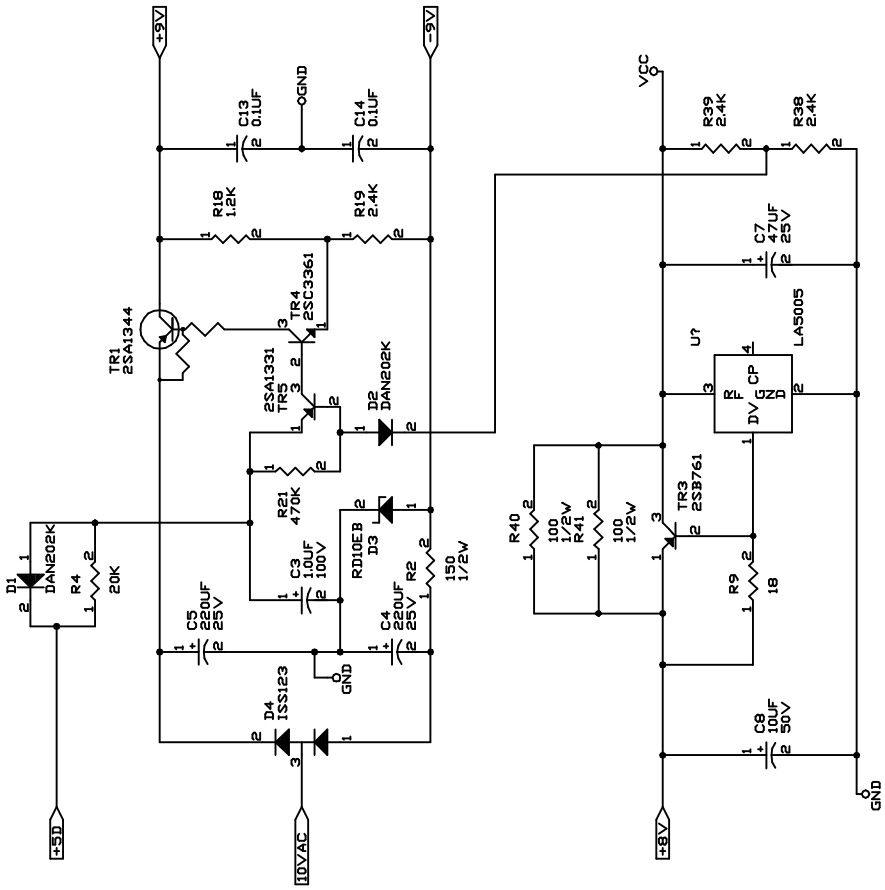

SERIAL INTERFACE POWER SUPPLY

SLHI CIRCUIT BOARD