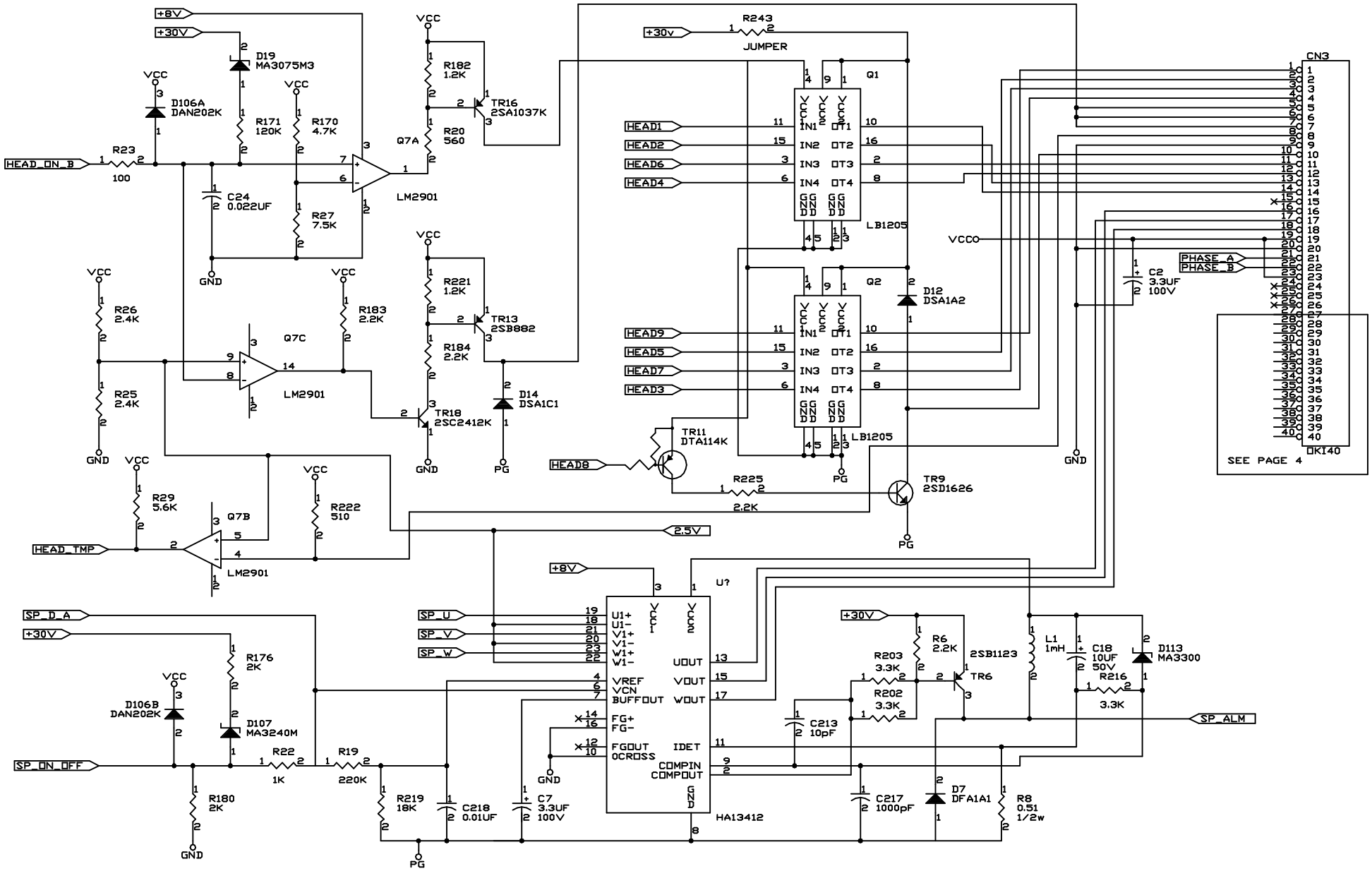

HEAD / SPACE MOTOR CONTROL
SLMR-51 CIRCUIT BOARD