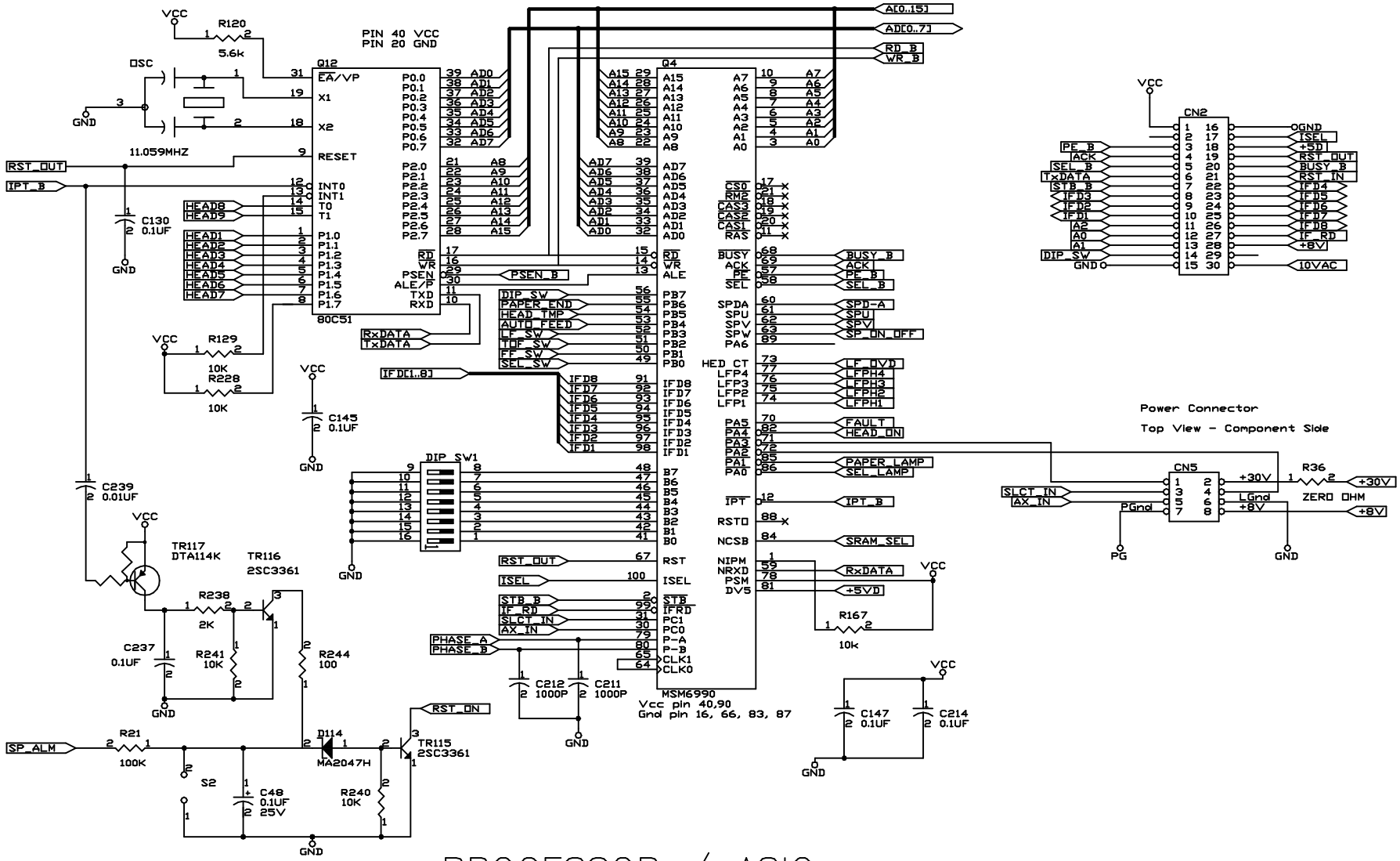

PROCESSOR / ASIC
SLMR-51 CIRCUIT BOARD