ithaca®

a product of TRANSACT

Epic 950™

Maintenance Manual

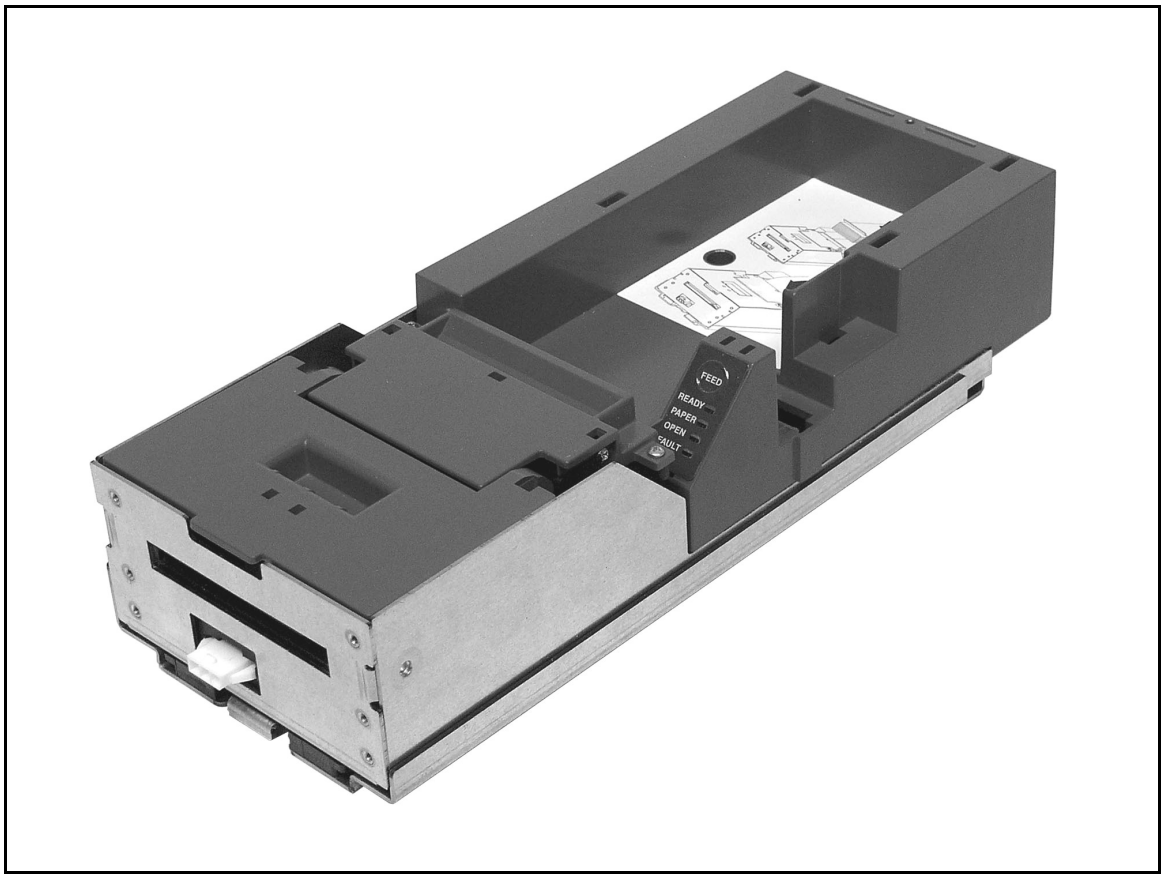

PN 95-05140
Rev. 'K'
July 2005

Change History

Rev A	Initial release
Rev B	Pg. 69 updated item #1 p/n
Rev C	Pg. 71 updated item #1 p/n
Rev D	Pg. 69 updated item #15 p/n & Pg. 71 updated items #6 & #7
Rev E	Pg. 69 updated item #15 p/n
Rev F	Pg. 68 updated item #4 p/n
Rev G	Pg. 68 updated item #17 p/n
Rev H	Pg. 69 updated item #5 p/n (R95-04974 was 95-04974)
Rev J	Pg. 69 updated item #16
Rev K	Pg. 69 updated items # 14 & #22

Important:

Before installing any equipment be sure to consult the specifications in this manual. Failure to do so may cause integration problems. Portions of this integration manual may be changed without prior notice.

Note:

Losses that can be attributed to improper installation and working procedures are not the responsibility of TransAct Technologies Inc. No part of this manual may be used to recreate any part of the Epic 950™ Printer. This manual is to be used for integration purposes only. If this manual contains any questionable information or mistakes please contact TransAct for assistance.

Disclaimer

NOTICE TO ALL PERSONS RECEIVING THIS DOCUMENT:
The information in this document is subject to change without notice. No part of this document may be reproduced, stored or transmitted in any form or by any means, electronic or mechanical, for any purpose, without the express written permission of TransAct Technologies, Inc. ("TransAct"). This document is the property of and contains information that is both confidential and proprietary to TransAct. Recipient shall not disclose any portion of this document to any third party.

TRANSACT DOES NOT ASSUME ANY LIABILITY FOR DAMAGES INCURRED, DIRECTLY OR INDIRECTLY, FROM ANY ERRORS, OMISSIONS OR DISCREPANCIES IN THE INFORMATION CONTAINED IN THIS DOCUMENT.

TransAct cannot guarantee that changes in software and equipment made by other manufacturers, and referred to in this publication, do not affect the applicability of information in this publication.

Copyright

Revision Level K
July 2005
Printed in USA

Trademarks

Some of the product names mentioned herein are used for identification purposes only and may be trademarks and/or registered trademarks of their respective companies.

BANKjet, 50Plus, Insta-Load, Ithaca, "Made to Order. Built to Last", Magnetec, PcOS, POSjet, PowerPocket and TransAct are registered trademarks and Epic 950, Flex-Zone, imPort, ithaColor, iTherm, KITCHENjet, Momentum, QDT and TicketBurst are trademarks of TransAct Technologies, Inc.

Table of Contents

Figures

Tables

chapter 1

Introducing Your Epic 950 Printer

About Your Epic 950 Printer

The Ithaca Epic 950™ printer represents the very latest technology for use in gaming ticket printing applications. It features full backward compatibility for previous users of Ithaca Series 800 printers, together with a host of new features designed to improve the performance of your gaming operations, including:

- TicketBurst™, a unique buffered transport system that prints and bursts the entire ticket internally before presenting it to the operator, solving the problem of premature ticket removal.

- Internal separation of tickets, providing consistently perfect single tickets accurately separated along perforation lines.

- HotSwap QDT™ (Quick Disconnect Technology) lets you remove the printer without the need to disconnect power from the unit, incorporating a one-touch hot swappable design that lets you remove and replace your printer at the touch of a front-mounted latch.

- Expanded status LEDs, giving you immediate visibility on printer, paper and fault status.

- The ability to upgrade your firmware completely via download using the imPort™ download port, with no hardware modification required.

- 2-color ticket printing with user-programmable images and layout, to turn your tickets into a key part of your brand identity and marketing program.

Above all, the Epic 950 is designed for ease of programming and ease of use in your gaming operations. While supporting the full command language and macro features of the Series 800 printer, the Epic 950 introduces a new higher-level command interface which lets you quickly and easily integrate more layout and printing options than ever – while giving you the reliability, durability and uptime you have come to expect from Ithaca printers.

Who Should Read This Guide?

This document is intended for trained service technicians who will be working with the Epic 950 printer.

What Is Included in This Guide?

This Maintenance Manual covers the proper maintenance procedures for servicing the Epic 950 printer. This manual provides an overview of:

- Epic 950 printer specifications.
- Mounting requirements.
- Printer sensors.
- Electrical connections.
- Operational procedures.
- Assembly/disassembly procedures.
- Listing of available spare parts.

We want you to have a trouble-free implementation with your Ithaca printer. For any issues not covered in this guide, quality technical support is available on-line at **www.transact-tech.com**, or by telephone at (607) 257-8901 or (877) 7ithaca – consult the following pages for more details about our support services.

Warranty Options

All Epic 950 Printers come with a standard 24-month standard warranty covering both parts and labor that starts upon shipment from the factory. An optional extended warranty, covering both parts and labor for an additional 12 months, may be purchased separately. For more information concerning the warranty options, please contact the Sales Department at TransAct's Ithaca facility. You are responsible for insuring any product returned for service, and you assume the risk of loss during shipment to Ithaca C.O.D. packages are not accepted and warranty repairs are subject to the terms and conditions as stated on the Ithaca warranty policy.

Technical and Sales support

Your Ithaca printer is backed by the resources of TransAct Technologies, a global technology firm with dedicated technical support and sales assistance. Here is how we can help you:

On-line Technical Support

Our web site at **www.transact-tech.com** is your on-line portal to obtaining technical assistance with your Ithaca printer. Click on the Technical Support link to find documentation for your Epic 950 printer, including the Epic 950 OEM Integration Manual. Our on-line support site also includes a convenient e-mail assistance request form, where you can submit support requests 24 hours a day, and receive a return contact from a TransAct support technician during regular business hours.

Telephone Technical Support

Live telephone support is available Monday through Friday from 8 AM to 5 PM Eastern US time, excluding holidays. We can provide general information about integrating Epic 950 printers with your system, technical support, documentation, or assistance in sending a printer for service. To obtain telephone support, call TransAct's Ithaca Facility at (607) 257-8901 and ask for Technical Support. To help us serve you faster, please have the following information ready when you call:

- The Model Number and Serial Number of the printer.
- A list of any other peripheral devices attached to the same port as the printer.
- What application software, operating system, and network (if any) you are using.
- What happened and what you were doing when the problem occurred.
- How you tried to solve the problem.

Return Materials Authorization and Return Policies

If the technical support person determines that the printer should be serviced at our facility, and you want to return the printer for repair, we will issue you the Returned Materials Authorization (RMA) number that is required before returning the printer. Repairs are warranted for 90 days from the date of repair or for the balance of the original warranty period, whichever is greater. Please prepare the printer being returned for repair as follows:

- Pack the printer to be returned in the original packing material.
- Packing material may be purchased from TransAct's Ithaca Facility.
- Do not return any accessories unless asked to do so by a support technician.

- Write the RMA number clearly on the outside of the box.

Service Programs

TransAct Technologies Incorporated has a full service organization to meet your printer service and repair requirements. If your printer needs service, please contact your service provider first. If any problems still persist, you can directly contact the Ithaca facility's Technical Support Department at (607) 257-8901 or (877) 7ithaca for a return authorization. International customers should contact your distributor for services. TransAct offers the following service programs to meet your needs.

- Extended Warranty.
- Depot Repair.
- Maintenance Contract.
- Internet Support.

Sales Support

To order supplies, receive information about other Ithaca products, or obtain information about your warranty, contact our Sales Department at the contact telephone or fax numbers listed below. To receive information on International distribution, visit our web site at **www.transact-tech.com**.

Contact Information

TransAct Technologies Incorporated
Ithaca Facility
20 Bomax Drive
Ithaca, NY 14850 USA

Telephone	(877) 7ithaca or (607) 257-8901
Main fax	(607) 257-8922
Sales fax	(607) 257-3868
Technical Support fax	(607) 257-3911
Web site	**www.transact-tech.com**

chapter 2

Epic 950 Specifications and Requirements

Epic 950 Specifications and Requirements

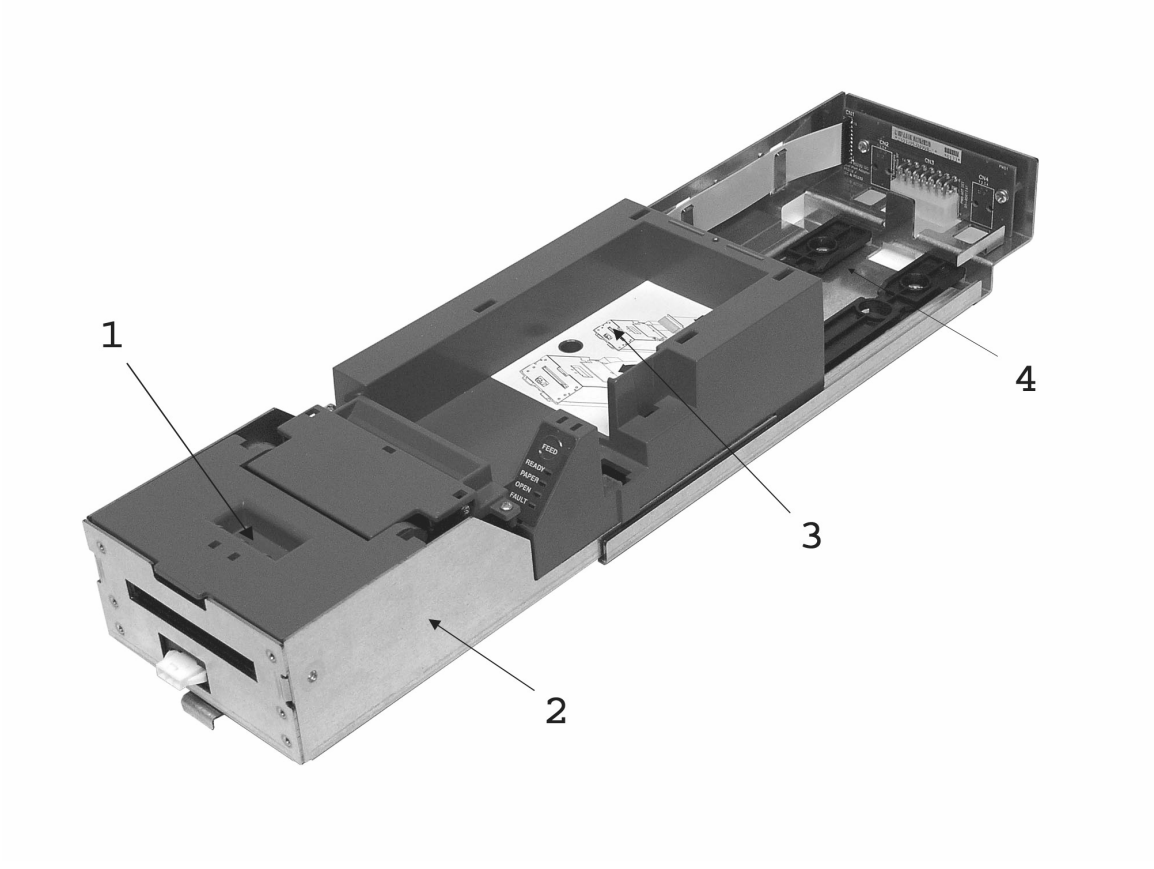

Figure 1. Epic 950 Printer Component Overview

1. Printer Mechanism
2. Inner Chassis Assembly
3. Printer Ticket Supply Bucket Assembly
4. Outer Chassis Assembly

Standard Features

The following features are common to the Epic 950 Printers:

Key features:

- Perforated fan folded tickets in a stack of 200, 400 or 600 tickets.
- Barcode and total ticket cash-out capabilities.
- TicketBurst™ – incorporating print, burst and transport zones, where the ticket is completely printed and burst before transport to operator.

- HotSwap QDT™ (Quick Disconnect Technology), a hot swappable printer mechanism design for easy service.
- Modular interface PCB.

Other standard features:

- Selections of 7.5, 10, 12, 16.5 and 20 characters per inch printing.
- Selectable printing of Normal, Double-high, Double-wide and Double-high/Double-wide.
- Sensors for Burst Ticket, Ticket Low, Top-of-Form/Ticket Out, Chassis Open, and Ticket Taken.
- Cover Open switch.
- Modular printer mechanism, ticket supply bucket and sliding unit for easy maintenance.
- Open ticket path for ticket jam clearing.
- Operator interface: FEED button, status LED's (Ready/Paper/Open/Fault).
- Bezel lamp connection.
- imPort™ firmware and graphics download port.
- Print face down.
- Page mode printing.
- Audible Buzzer.

Optional Features

- 600 count ticket capacity using optional extender walls.
- Dual port interface capable.
- RS-232 interface capable
- USB interface capable.
- Bezels (Internal and external).

(Dimensions reflect use of 200 unit ticket supply bucket unless otherwise noted)

Dimensions

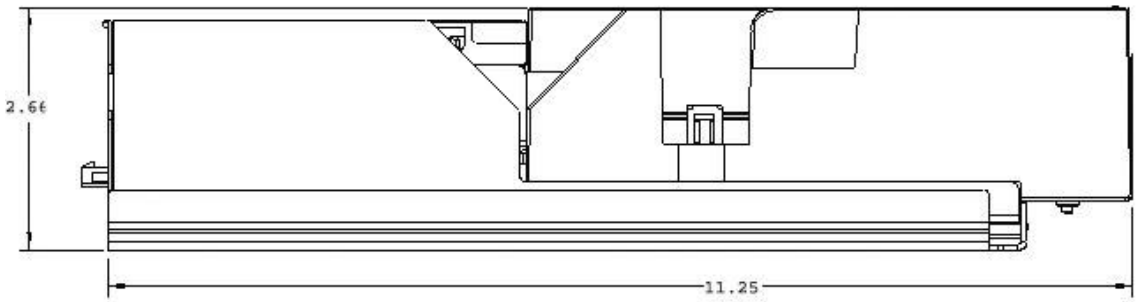

Figure 2. Epic 950 Printer: Dimensions

Stationery Module Size: **H:** 2.66" (66.6mm) **W:** 4.66" (112.5 mm) **D:** 11.25" (284.2 mm)

The Epic 950 is a stationery module, and is designed to work with any of the three interchangeable ticket capacities using extender walls. Please be sure to specify the desired box size when making your selections.

200 ticket setup:	**H:** 2.66" (66.6mm)	**W:** 4.66" (112.5 mm)	**D:** 11.25" (284.2 mm)
400 ticket setup:	**H:** 4.04" (102.6 mm)	**W:** 4.66" (112.5 mm)	**D:** 11.25" (284.2 mm)
600 ticket setup:	**H:** 5.54" (140.7 mm)	**W:** 4.66" (112.5 mm)	**D:** 11.25" (284.2 mm)

Weight: 3.8 lbs.

Interface

Type Bi-Directional, serial RS-232 using transmit, receive, and ground.
Protocol Ready/Busy or XON/XOFF, 9600 baud, 8 data bits, no parity, 1 start bit, 1 stop bit.

Printer

Printer Type: Fixed linear thermal head.

Printer Environmental Conditions

Operating Temperature Range:	5º ~ 45ºC (41º ~ 113ºF)
Shipping/Storage Temperature Range:	–10º ~ 50ºC (14º ~ 122ºF)
Operating Humidity Range:	10% ~ 90% Noncondensing only
Shipping/Storage Humidity Range:	5% ~ 90% Noncondensing only

Power Requirements

24 Vdc ± 10%.
2.2 Amps max. @ 24 Vdc @ 25% print ratio.

Test Standards

EN50081-1-1992
EN55022-1998, Class A
FCC CFR-47, Part 15, Class A
EM55082-1-1998
EN55024-1998
EN61000-4-2, Level 3
EN6100-4-3, Level 2
EN61000-4-4, Level 2
EN61000-4-5, Level 2
EN61000-4-6, Level 2

ESD IEC 1000-4-2, 6kv direct discharge and 8kv air discharge.
Radiated RF IEC 1000-4-3, 3 v/m from 27 MHz to 1 GHz.
Fast transit (burst) IEC 1000-4-4, 2kv powerline, 1kv I/O lines (level 3, Industrial environment).

Acoustic Noise: Less than 65 decibels max. while printing a 30/30 format. (measured in 10 positions @ operator level with distance of 1 meter, per ISO 779).

Mechanism Characteristics

Drawer Slide Force:	2.0 lbs. max.
Opening Distance:	190mm (7.5") (approximate).
Drawer Holding Force:	5.5 lbs. (out of detents).
Mechanism Operating Angle:	Horizontal to 45º inclination (ticket exit slot up).

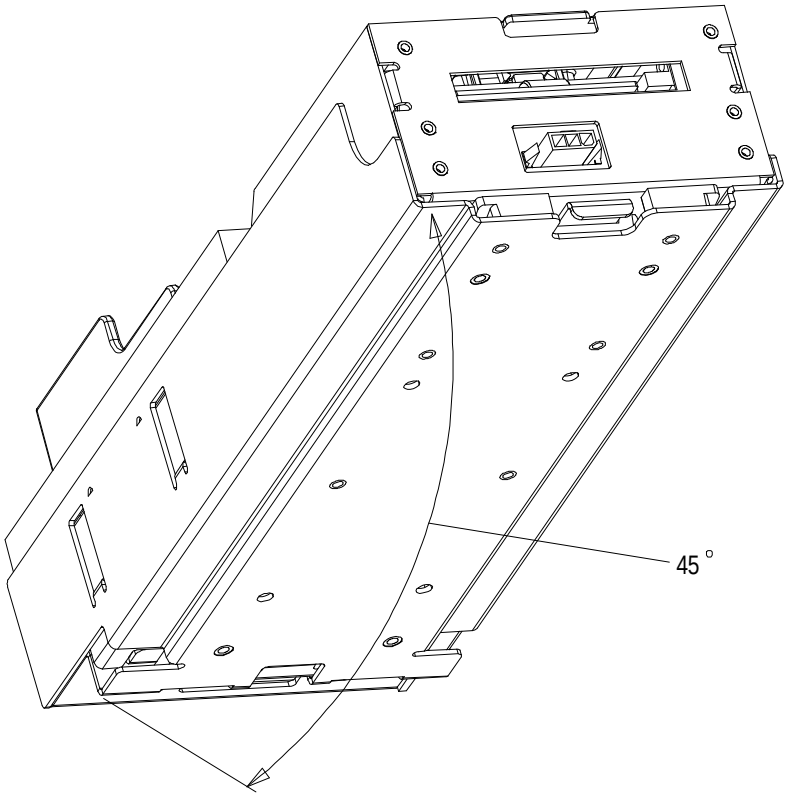

Figure 3. Maximum Mechanism Operating Angle

Printing Specifications

Print Method:	Thermal Sensitive Line Dot System.
Ticket Handling:	TicketBurst™ ticket buffering with burst.
Print Speed:	125 mm/sec. (5" per sec.) max. (monochrome) (in text mode).
Presentation Speed:	125 mm/sec. (10" per sec.) min.
Resolution:	203dpi x 203dpi.
Dot Pitch-Horizontal:	0.125 mm (8 dots/mm).
Dot Pitch-Vertical:	0.125 mm (8 dots/mm).
Line Feed Pitch:	3.2 mm (.125").
No. of Elements:	496 dots in-line.
Print Width:	62.0 mm (2.44").

Ticket Specifications

Dimension: (same size as US dollars)

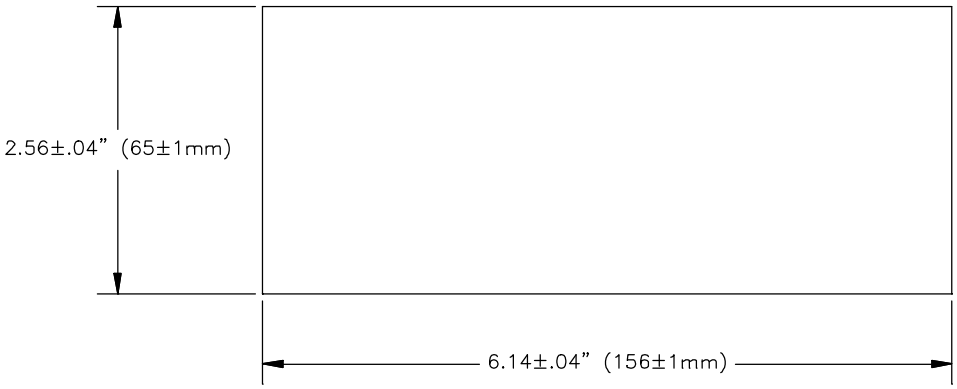

Figure 4. Sample Ticket Size

Ticket Width:	65 ± 1mm (2.56" ± .03").
Ticket Length:	156 ± 1mm (6.14" ± .04") between perforations.
Ticket Thickness:	4.5-5.0 mils (.114-.127 mm).
Ticket Weight:	27# (102 g/m²) Ave.
Reading Code:	Interleaved. 2 of 5 (bill acceptor).
Minimum Bar Width:	0.5 mm min./0.6 max.
W : N Ratio:	3 : 1 (recommended, with 12:4 wide bar width (dots):narrow bar width (dots)).
Letter Quantity:	6 min./18 max.
PCS Value:	0.6 min.
Printing Colors:	Black (visible light absorption: 600 ~ 700 nm), Red, Green, Blue
Optical Reflection Level:	White thick bar: 3.0V min. Black thick bar: 2.0V max.
Amplitude Level:	0.5V (white and black bar).
Waveform Distortion:	0.3V max.
Transmission Level:	Level 1: 1.3V max. Level 2: 0.5V min.

The Epic 950 printer requires the following tickets for proper printing:

Ticket Type:	Kanzaki TO-381N or approved equivalent (monochrome). Appleton Dual RB/GB/BB (2 color). Thermal sensitive layer facing down. Thermal sensitive side to be coated for wear characteristics. Top coating comparable to Seiko paper.
Quantities Available:	Fan-folded stacks of 200, 300, 400 and 600 tickets.

Design Envelope: Ticket Clearance

A minimum paper clearance distance of .75" is required above the printer's ticket buckets. The minimum clearance for all ticket suuply buckets will vary, but should fall within the .75" minimum clearance measurement.

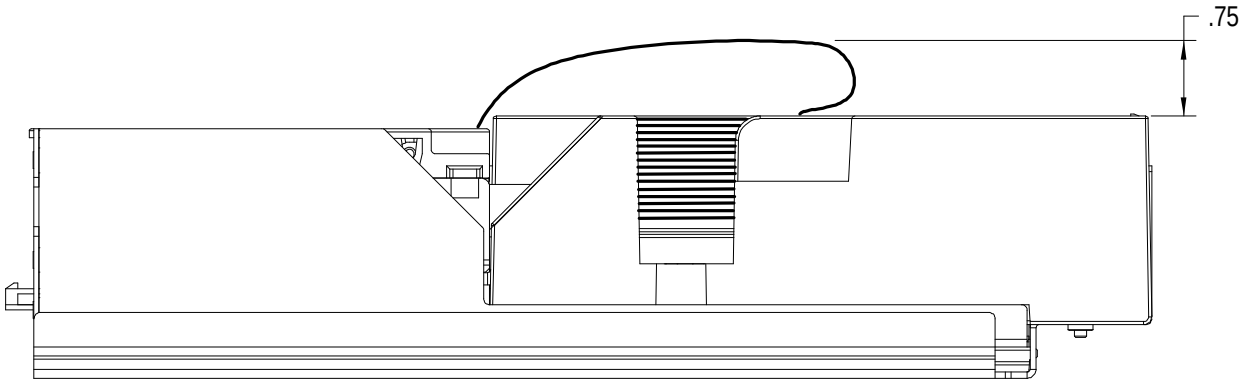

Figure 5. Design Envelope: Ticket Clearance

Black Dot Position and Presentation Scheme

All graphics preprinted on the ticket must be in thermal paper compatible ink.

Black Dot Position

The back of the ticket is used for the Black Dot/Top of Form indicator. For the printer to sense when a ticket has been indexed to the printing position, a Black Dot/Top of Form sensor is needed. It must be printed in black, thermal paper compatible, infrared readable ink. The 10.16mm area in line with the Black Dot/Top of Form indicator and the ticket edge (keep-out zone) must remain clear, as the Ticket Out Sensor will read that area while the ticket is printed and presented. The remaining area on the back of the ticket may be used for rules and disclaimer.

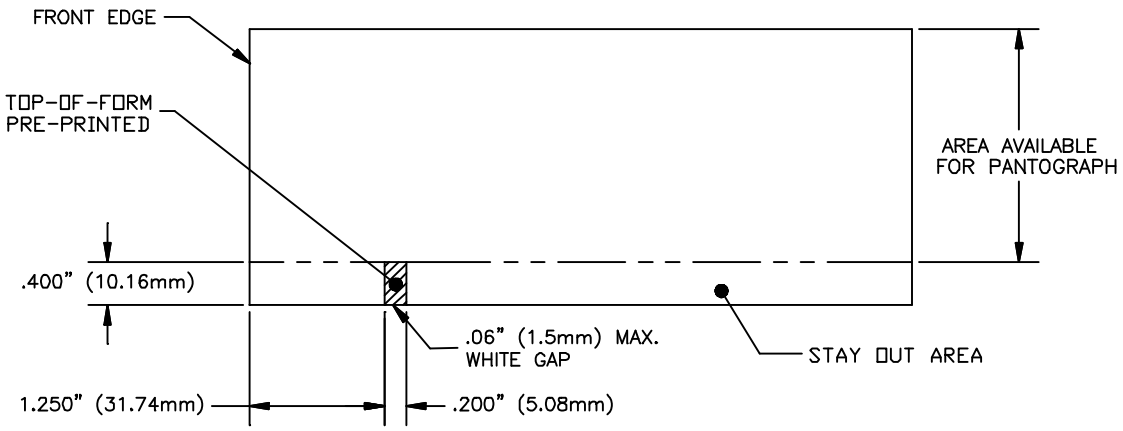

Figure 6. Location of Black Dot/Top of Form Indicator on Back of Ticket

Ticket Stack Orientation

To ensure the ticket is loaded correctly into the printer, the ticket stack must be properly loaded in the ticket supply bucket. The stack must be oriented so that the Black Dot/Top of Form mark of the tickets is on the leading edge of the ticket, not near the perforation of the next ticket. If the top ticket on the stack has the back facing upward, the perforation attaching the next ticket will be toward the front of the Ticket Supply Bucket with the Black Dot/Top of Form indicator in the rear right corner. If the print area is facing upward, the perforation attaching the next ticket will be toward the rear of the Ticket Supply Bucket. For instructions on inserting the first ticket into the printer, see the section “Loading Tickets into Feeding Mechanism”.

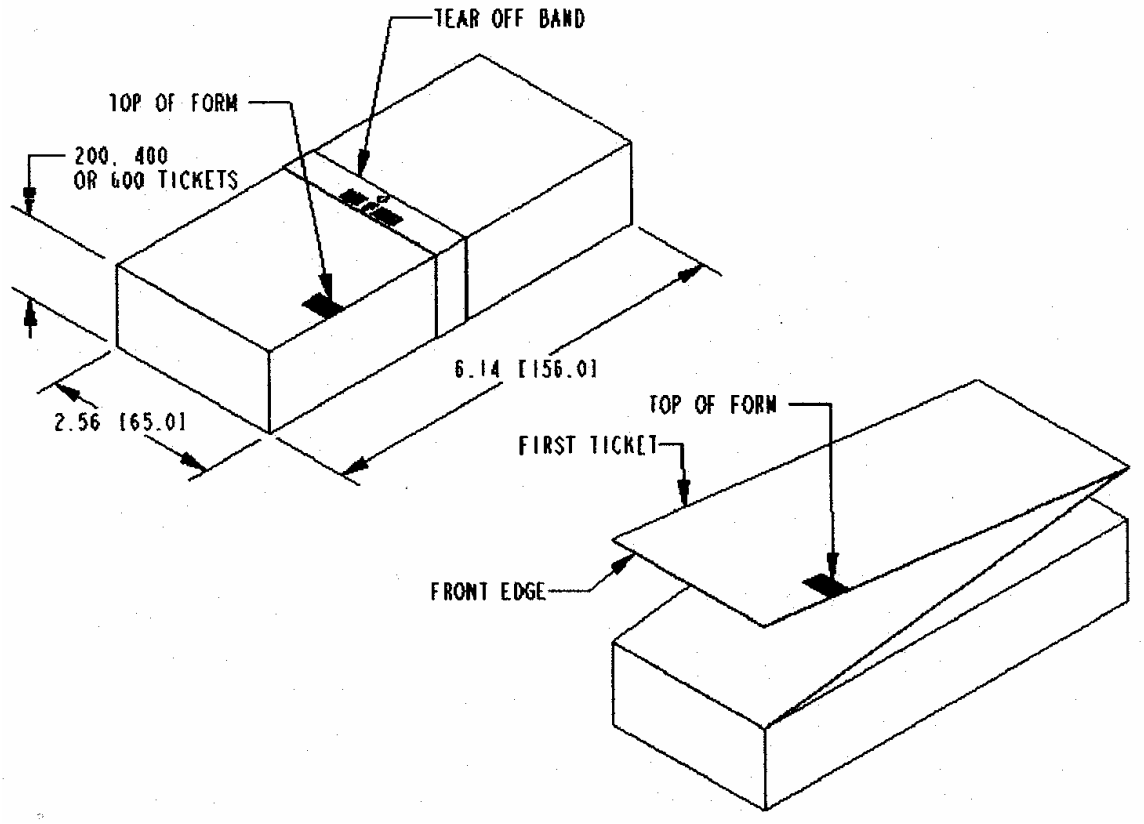

Figure 7. Ticket Stack Orientation

chapter 3

Mounting Requirements

Mounting Requirements

Outer Chassis to Final Product

Bottom: 4x M4x 0.7 press nuts.
4x ? .180" thru holes.

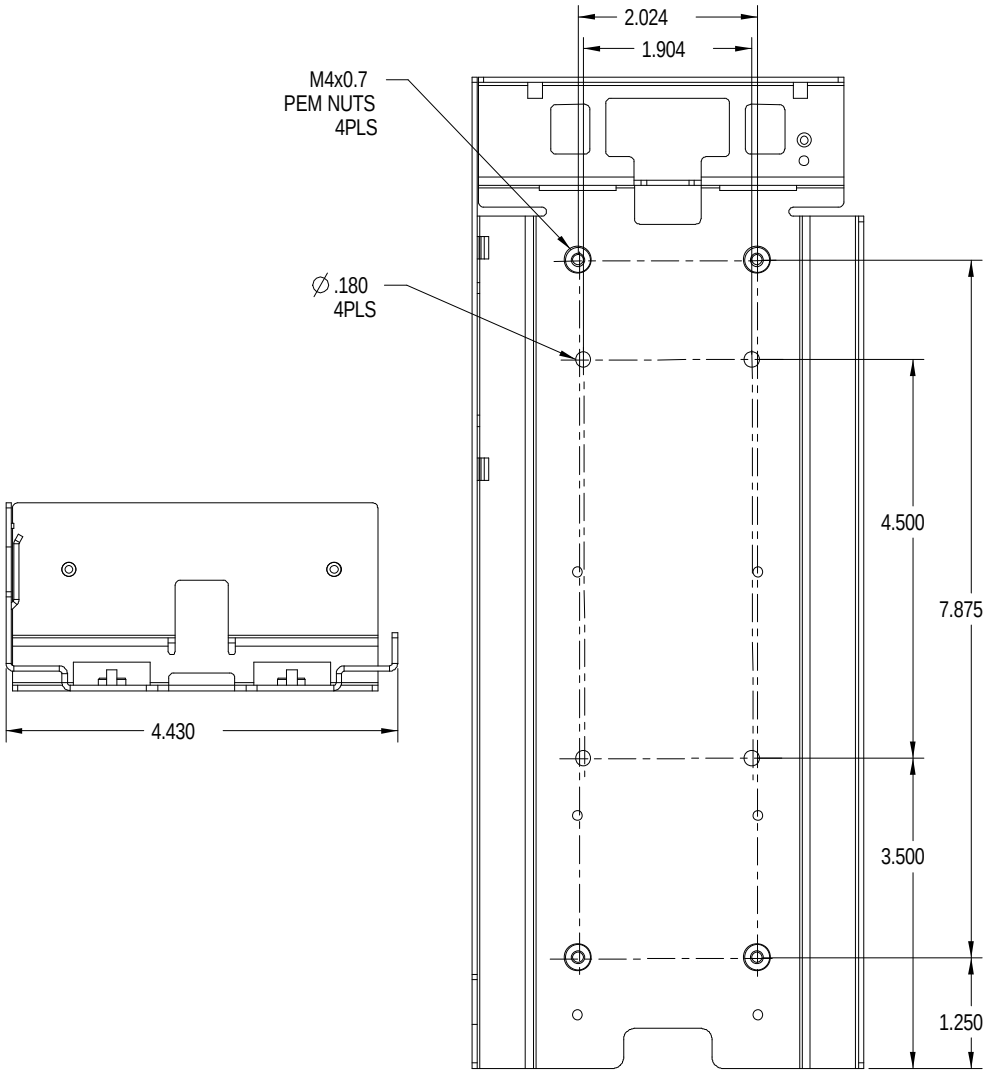

Figure 8. Outer Chassis to Final Product

Front

Custom Bezel Specifications and Recommendations

Custom Bezel to Printer Mechanism Mounting points
Epic 950 printers are designed to accommodate a customer supplied bezel assembly that is mounted following the hardware and mounting dimensions as listed. The following drawing shows the positioning and dimensions of the Epic 950 printer's mounting points.

Front: 6x **M3x 0.5 press nuts** and interface with custom bezel.

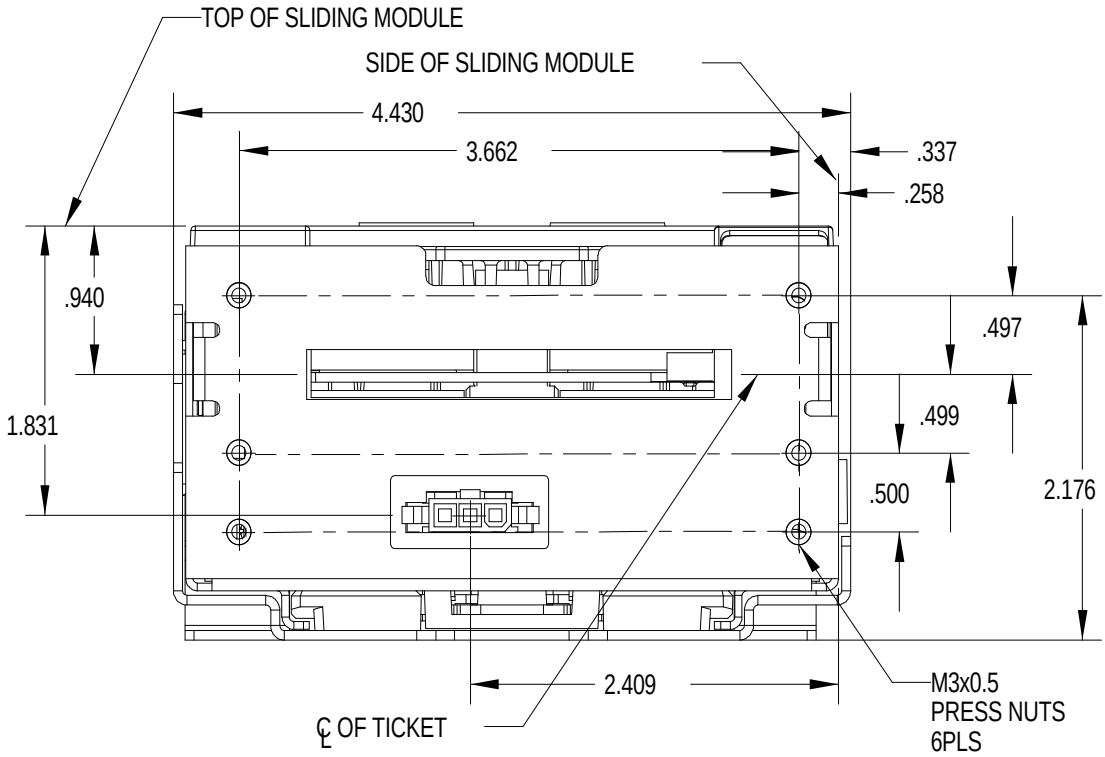

Figure 9. Custom Bezel Mounting and Hardware Requirements

chapter 4

Epic 950 Theory of Operation

Theory of Operation

Mechanism

Print Head

The print head in the Epic 950 is a high speed, thick film device configured as a single row of 576 dots, spaced at 8 dots/mm for a total printable width of 72mm (2.83”). Print data is sent from the controller board as a serial data stream at 4 MHz .The head elements are then activated by signals from the main controller board to form the image on the ticket. The Epic 950 uses a multi level energy control system to compensate for dot history and to generate two color images. All timing is controlled by the main board electronics. The head also contains a thermister, which is used to monitor the temperature of the head substrate. Dot energy is continually adjusted based on head temperature, supply voltage, dot history, and ticket sensitivity. The print head connects to the controller through a 28 position Flexible Flat Cable (FFC).

Ticket Motion

The Epic 950 mechanism contains two identical step motors. The ticket is moved past the thermal print head by a permanent magnet, 7.5 degree step motor running at a maximum speed of approximately 2000 steps per second. The gear train is designed such that one motor step equals .0625mm of ticket motion resulting in a ticket feed speed of 127 mm/sec (5 in/sec).

Burst Operation

To prevent the player from pulling an incomplete ticket through the printer, the Epic 950’s TicketBurst™ feature ensures that the ticket is contained within the mechanism until it is completely printed and has been separated from the subsequent ticket. To accomplish this, as the ticket is printed, it is fed into a ticket bin within the print mechanism. As it feeds, the ticket folds back over a burst bar located in the ticket path. The separation is then performed by positioning the ticket perforation at the burst bar and reversing the ticket feed. A sensor is used to monitor the burst operation and to confirm successful separation.

Ticket Transport

The second step motor is used to drive the ticket transport rollers. Once the ticket has been separated from the subsequent ticket during the bursting operation it is presented to the player by the transport mechanism. This motor operates at a higher step rate than the ticket feed motor and presents the ticket at approximately 250 mm/sec. (10 in/sec.)

Control Electronics

The Epic 950 printer contains four circuit boards. The main controller board, mounted on the inner chassis, contains the microprocessor, memory, drivers, communications, and sensors used to control the mechanism. This board also contains an 18 position drawer connector which allows the inner chassis to be easily disconnected from and reconnected to the outer chassis. It is possible to operate the printer without the outer chassis by connecting directly to the 18 position drawer connector at the rear of the main controller.

The outer chassis contains two PCBs connected by means of a 20 position flat flex cable (FFC). The front most board, which is allowed to slide in the outer chassis, contains a drawer connector which interfaces to the main controller board. The printer signal and power connections are then routed from this board, through the FFC cable, to a communications interface board affixed to the outer chassis at the rear of the printer. The communications interface board type is selected at the time of manufacture and contains connectors appropriate for the desired interface.

There is also a Keypad/LED board mounted to the underside of the ticket supply bucket, connected to the main controller through a 6 position FFC. This board contains one switch and four LEDs that are used to convey printer status.

Processor and Memory
The processor used in the Epic 950 is a Motorola Coldfire MCF5249 running at 120 MHz. The processor interfaces, through a 16 bit external bus, to a 64Mb Synchronous Dynamic Ram (SDRAM), 32Mb of Flash Memory, 8Kb of EEPROM, and a 36 Macrocell Complex Programmable Logic Device (CPLD). The processor also contains general purpose I/O pins which are used to directly control many of the printer functions including:

- Status LEDs
- Serial Communications Data and Control
- Print Head Data and Timing
- Print Head Temperature and Voltage monitoring

The remaining printer functions are controlled though the CPLD including:

- Ticket Feed Motor Control
- Sensor Calibration
- Communication interface selection

Print Head Interface
Print data is formatted by the controller and transmitted to the head through the Queued Serial Peripheral Interface (QSPI) on the processor. This interface allows rapid transmission of synchronous serial data with minimal software overhead. Once the transmission is completed, data is latched into the print head registers and the head is energized by the processor. For each line of dots printed, the head is energized twice to

compensate for dot history. All head interface lines are buffered by a 74HCT541Octal Bus Driver.

Motor Controllers
The Ticket Feed and Transport step motors are controlled by an ST Micro L6219 Full Bridge – PWM Step Motor Drivers. These drivers operate from the 24-Volt supply and are capable of up to 750ma of continuous output current. On the Epic 950, all step motor control lines are driven by the on-board CPLD.

The Ticket Feed and Transport motor circuits are set for a maximum motor current of 600ma. per phase. Control lines are connected to allow the motors to be operated in the half step mode.

Sensor Interface
The Epic 950 controller contains on-board analog to digital converters that allow the processor to directly read sensor analog output levels. These sensors outputs may also be read as digital values by the processor to minimize software overhead. In addition, critical sensors can be adjusted by means of firmware calibration routines. The table below lists sensor and other critical input signals used by the controller.

Sensor/Signal	Type	Analog Read	Digital Read	Adjustable
Ticket Low	Optical Reflective	Yes	Yes	Yes
Top of Form/ Ticket Out	Optical Reflective	Yes	Yes	Yes
Ticket Burst	Optical Reflective	Yes	Yes	Yes
Ticket Taken	Optical Interruptive	No	Yes	No
Cover Open	Switch	No	Yes	No
Chassis Open	Optical Interruptive	No	Yes	No
Head Temperature	Thermister	Yes	No	No
Supply Voltage	Resistor Divider	Yes	No	No

Power Supply Circuitry
There are four different power supply voltages used in the Epic 950. All voltages are derived from a 24-volt power supplied by the host.

Voltage	Derived From	Used For
24 VDC	Host System	Print Head, Step Motors
5 VDC	Switch mode regulator operating from 24 VDC	Print Head Logic, Communications Interface, Sensors
3.3 VDC	5 Volt Supply using low dropout (LDO) regulator	CPLD, Processor I/O, SDRAM, Flash Memory
1.8 VDC	5 Volt Supply using low dropout (LDO) regulator	Processor core

A power supply supervisor chip monitors the three logic supplies and provides reset control for the processor and CPLD. On board logic monitors the 24 volt power supply level and provides a power fail warning to the processor when the voltage dips below 18 volts. This allows the printer firmware to store printer status in non-volatile memory during a power fail condition.

Communications Interfaces

All communications interfaces and drivers, with the exception of USB, are resident on the main controller board. The communications interface board at the rear of the outer chassis is used solely to provide standard interface cable connections to the host system. In some, but not all cases, more than one interface may be active at a given time. This allows the implementation of a dual port configuration to print both cash tickets and coupons. Available interfaces and dual port configurations are described below.

Primary Interface	Available Secondary Interface
RS232	I^2C
NETPLEX	I^2C
I^2C	NETPLEX, RS232

The Epic 950 contains the imPort™ interface, an additional RS232 interface that is used for downloading firmware, font data and graphics files to the printer. This interface is accessed through a connector on the main controller and is not available for host connection on the communications interface board at the rear of the printer.

The circuitry for the USB communications interface is contained on the communications interface board mounted at the rear of the outer chassis. This board acts as a USB to RS232 converter and connects to the main controller through the standard RS232 communications lines.

Bezel Lamp Interface

The Epic 950 contains circuitry that provides 24V @ 1A maximum to operate bezel lamps. This signal is available on a three position connector mounted to the front of the print mechanism and is also available on the communications interface board on certain interface configurations.

Printer Sensors

The Epic 950 printers use several sensors to provide feedback to the host system. The Communications PCB handles all power and interface communications.

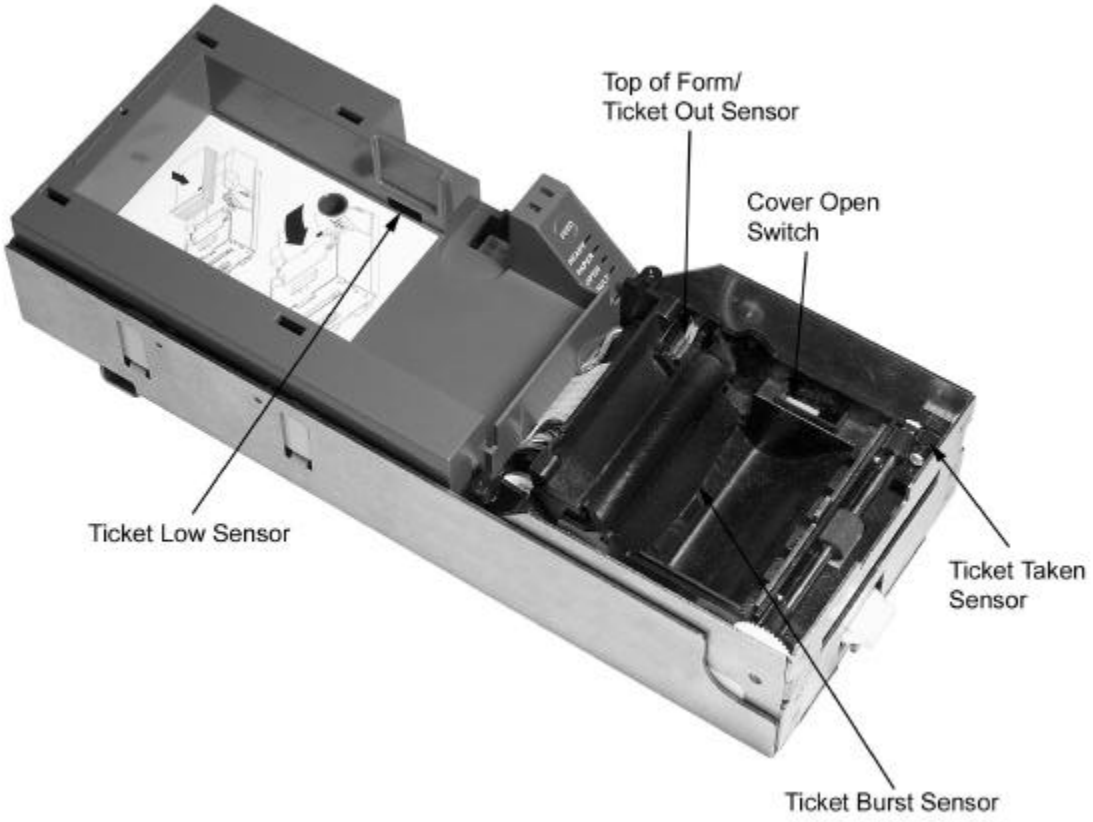

(Covers not shown for clarity)

Figure 10. Sensor Breakdown and Locations

Ticket Low Sensor

The ticket low sensor is a reflective optical sensor mounted in the ticket supply bucket. This sensor monitors the height of the ticket stack in the bucket, and returns a ticket low status when the stack contains less than 10 tickets. The ticket low status will be reported on the status byte, when the host issues a status request.

Top-of-Form/Ticket Out Sensor

The Top of Form (TOF)/Ticket Out sensor is a reflective optical sensor mounted in the ticket entry chute on the print mechanism. It is used to accurately position the ticket by detecting a pre-printed black mark on the back side of the ticket.

Ticket Burst Sensor

The Epic 950 printer incorporates a TicketBurst™ feature which automatically bursts tickets prior to presentation to the player. The ticket burst sensor is located in the center of the ticket path in front of the print head. It is an optical reflective sensor, and is used to verify that the ticket perforations have been separated during the burst operation, and that the ticket is ready for presentation.

Cover Open Switch

The cover open switch consists of a micro switch mounted in the print mechanism, which is activated by a tab on the cover. This switch, when activated, returns a cover open status to the host and inhibits the ticket printing operation until the Ticket Cover is closed.

Ticket Taken Sensor

The ticket taken sensor is positioned in front of the transport feed roller in the print mechanism. It is an interruptive optical sensor that is used to return ticket present/ticket taken status to the host system. It is also used during the burst operation to verify proper ticket positioning prior to the burst operation.

Chassis Open Sensor/Audible Alarm

The chassis open sensor is an optical reflective sensor mounted to the main controller PCB. It is activated by a flag mounted on the Outer Chassis and is used to detect the open/closed status of the Inner Chassis. If the Inner Chassis is not in the fully racked position, then the printer status LED will blink, indicating the printer is not ready.

1. **Chassis Open Sensor** (Sliding Module).
2. **Audible Alarm Buzzer** (PIEZO - game controlled).

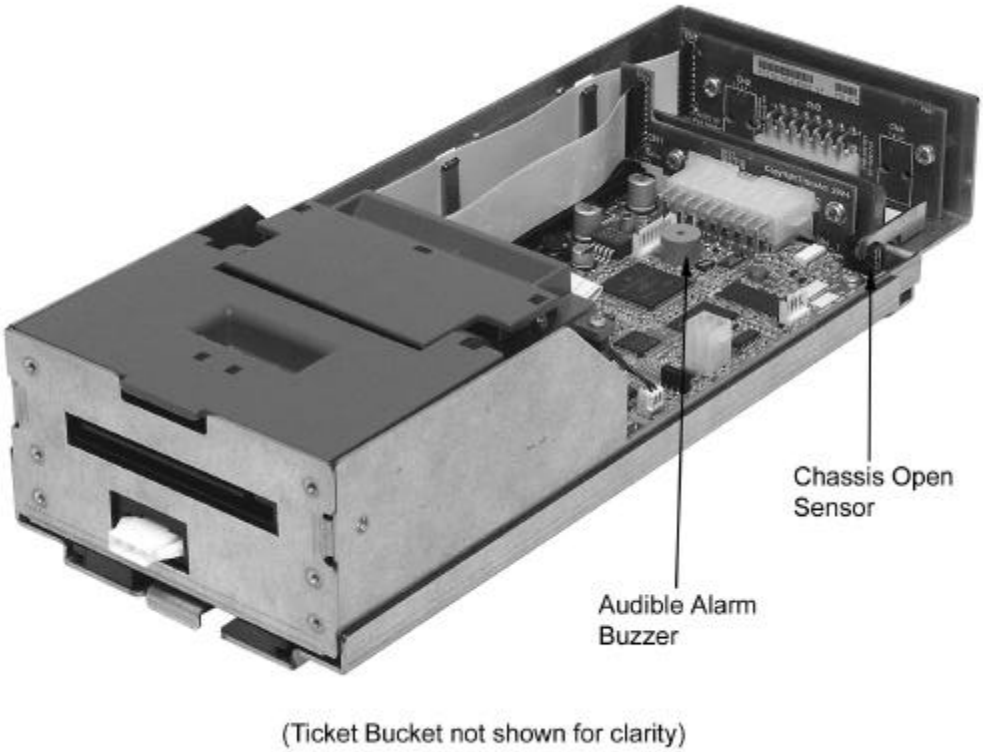

(Ticket Supply Bucket not shown for clarity)

Figure 11. Open/Close Position/Audible Alarm

Printer Status LED

The printer has been outfitted with a LED panel system that provides the condition of the printer by using solid or blinking status LEDs to communicate status information. The following table lists the different LED states for specific conditions within the printer.

Condition	Ready LED	Paper LED	Open LED	Fault LED
Unit Ready	On	Off	Off	Off
Cover Open	On	Off	On	Off
Chassis Open	On	Off	Blink	Off
Ticket Out	On	On	Off	Off
Ticket Low	On	Blink	Off	Off
Temperature Error	Blink	Off	Off	Blink
Paper Jam	On	Off	Off	Blink
Ram Error	2-Blink	Off	Off	On
Checksum Error	4-Blink	Off	Off	On

Table 2 Printer Status LED Indication Descriptions

Printer Block Diagram

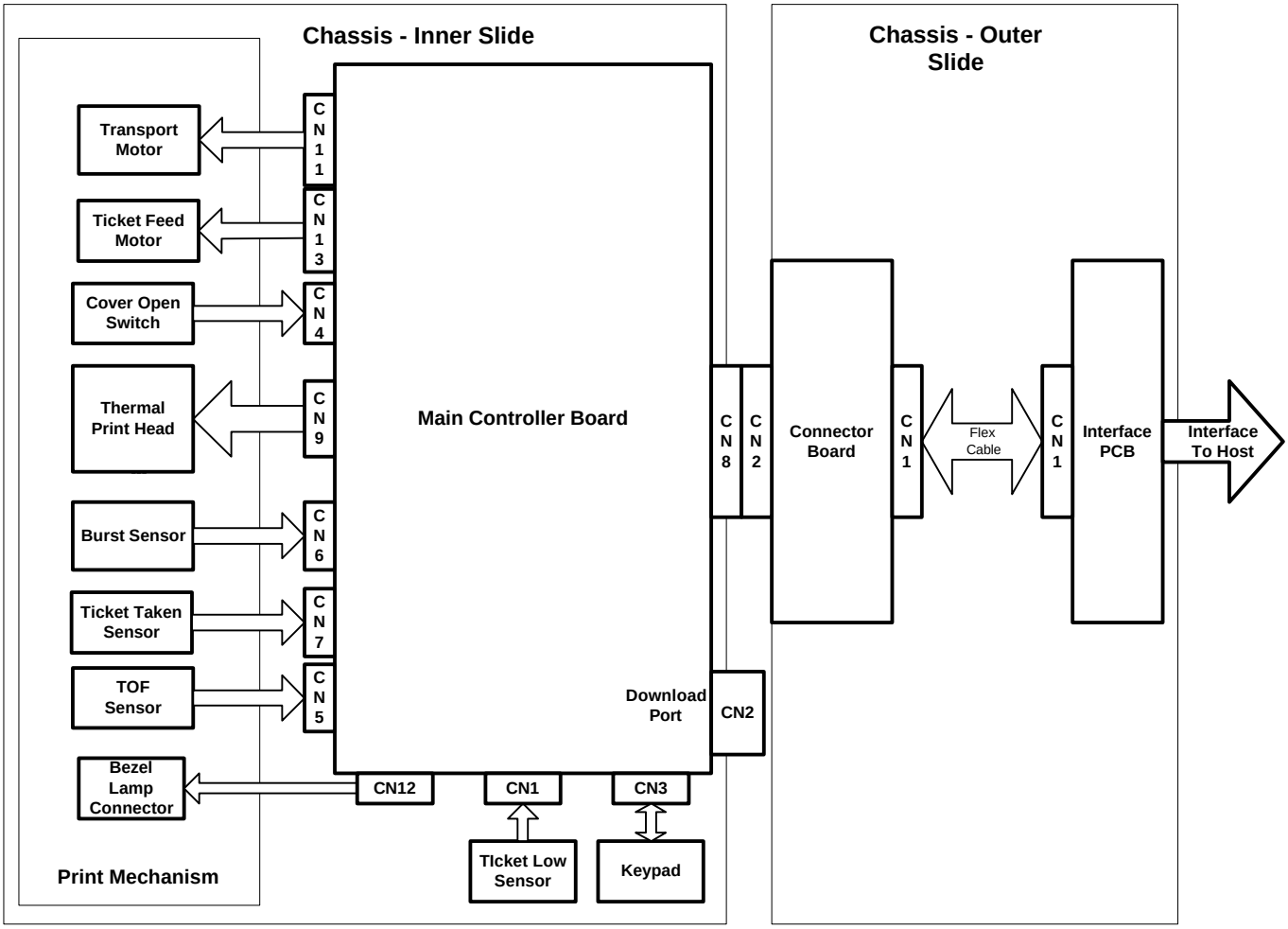

Figure 12. Epic 950 Electrical Operations Diagram

chapter 5

Electrical Connections

Serial Communications Interface PCB

All power and communications are supplied through the Serial Communications PCB located at the rear of the printer. The interface connector is a 14 position Molex Minifit Jr®., part number 39-30-1400, and will mate with Molex part number 39-01-2140 or the equivalent. Refer to Table 3 for pin connections.

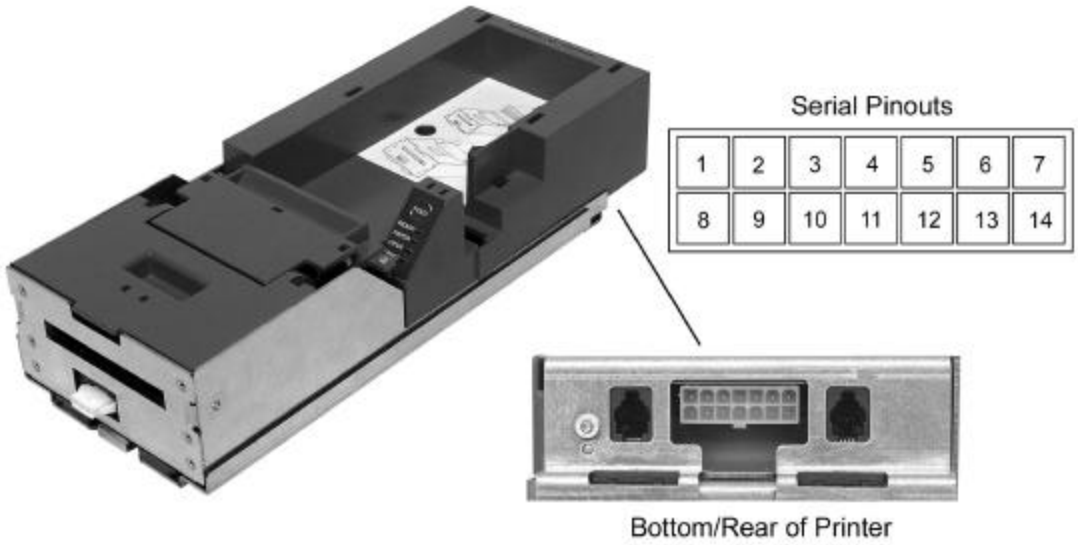

Figure 13. Serial Communication PCB Location and Connector Info

Serial Communication PCB Pin-Outs		
PIN #	FUNCTION	I/O
1	MRESET	I
2	Not Connected	N/C
3	+12 VDC	I
4	Not Connected	N/C
5	GND	-
6	+24VDC	-
7	GND	-
8	+24VDC	-
9	Bezel Lamp – Switched +24VDC	O
10	GND	-
11	RS232 RXD	I
12	RS232 TXD	O
13	DTR	O
14	RTS	O

Table 1. Serial Communication PCB Pin-Outs

Default Communication Settings

The RS-232C interface default configuration settings are:

Baud Rate:	9600 BPS
Data Bits:	8 Bits
Parity:	None
Stop Bits:	1
Handshaking:	XON/XOF
Receive Error:	Prints
Input Buffer	8,192 bytes

These communications settings may be altered only through the use of the CONFIG program, special printer configuration software available from TransAct. Contact TransAct Technical Support for further information on this utility.

Bezel Lamp Connector

The bezel connector is a Molex Minifit Jr®, part number 39-01-4032 and will mate with a Molex part number 39-01-4030 or equivalent.

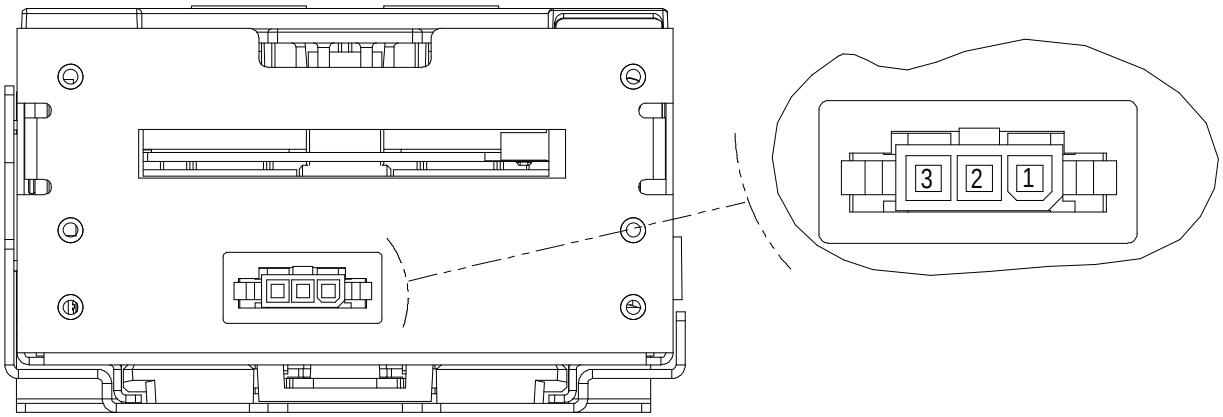

Figure 11. Bezel Lamp Connector Location and Connector Information

Bezel Lamp Connector Pin-Outs	
PIN #	FUNCTION
1	Modulated +24VDC
2	Not Connected
3	GND

Table 2. Bezel Power Connector Pin-Outs

Firmware Download Port

The Epic 950 printer features an imPort™ firmware and graphics download port, as shown in the figure below. This port uses a 4-pin Molex connector with an RS-232 interface. For further details on this use of this proprietary download port, please contact TransAct Technical Support.

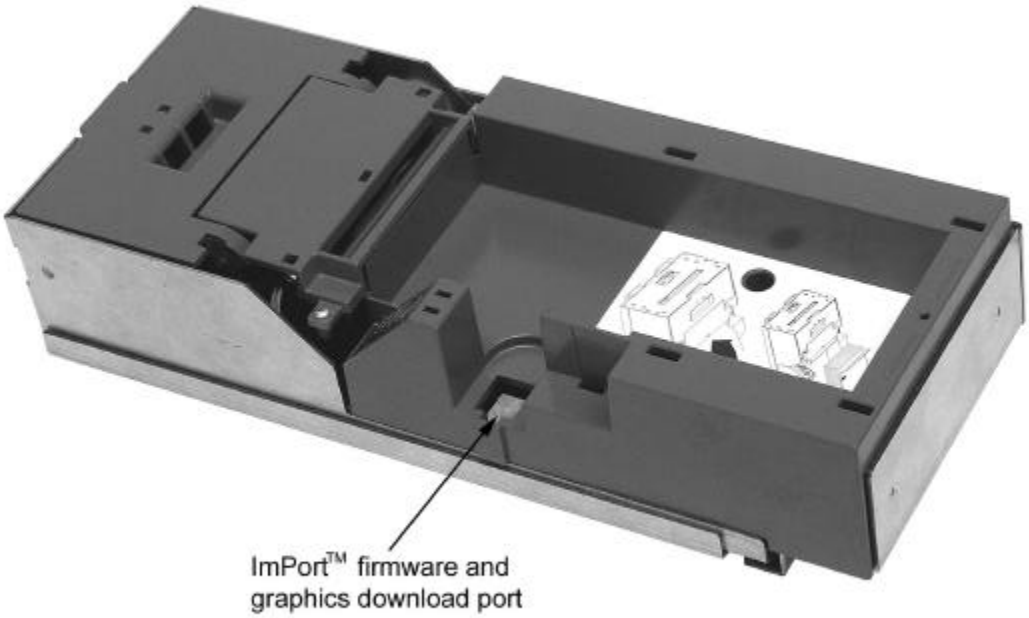

Figure 14. Firmware Download Port.

chapter 6

Operational Procedures

Racking/Unracking the Inner Chassis

All Epic 950 printers use a slider/detent/latch system with latch arms to retain the Inner Chassis from accidentally being separated from the Outer Chassis. The Epic 950 is opened for service by simply pulling on the ticket cover, pulling the Inner Chassis forward from the Outer Chassis as you would a filing cabinet. If accessible, a front-mounted release lever can also be pulled on to disengage and slide the Inner Chassis.

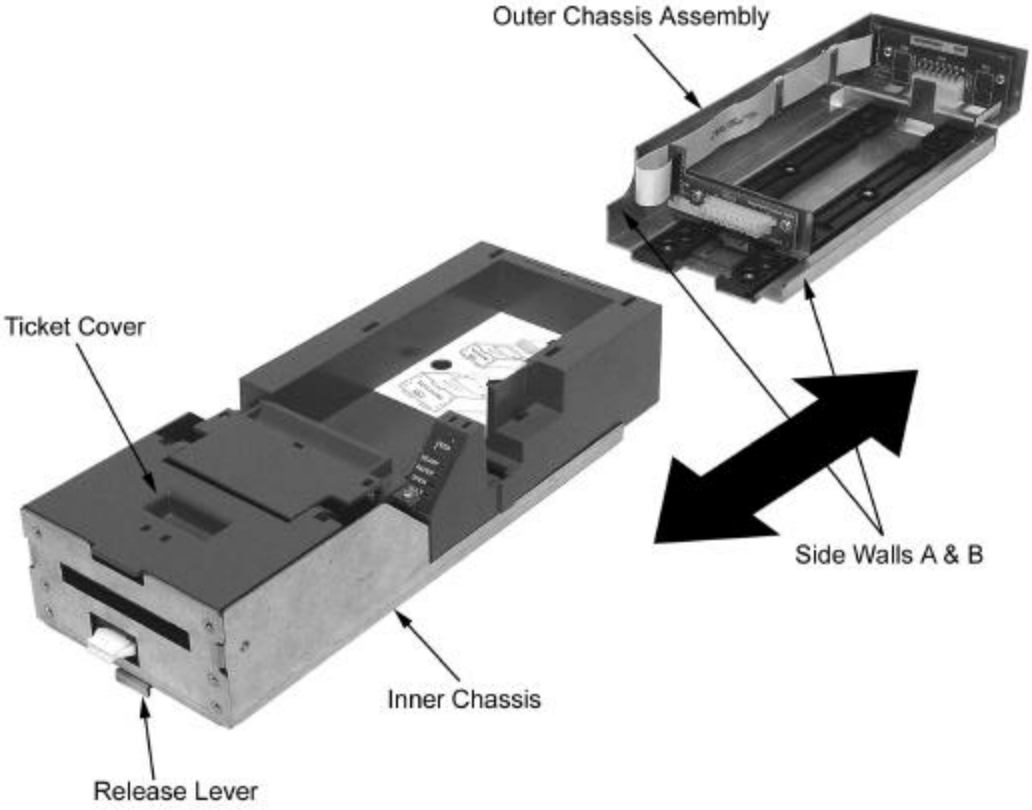

Figure 15. Racking/Unracking the Inner Chassis

To remove the Inner Chassis, perform the following steps:

- Pull on the Ticket Cover to release the rear detents, pulling the Inner Chassis towards you until its latches catch the forward detent slots in the Outer Chassis Slides.
- Pull on the Release Lever and pull forward on the Inner Chassis to disconnect from the Outer Chassis. (This assembly incorporates a HotSwap QDT (Quick Disconnect Technology) design, which may be removed while power is still on to the unit.)

To return the Inner Chassis to its base, perform the following steps:

- Align the base of the Inner Chassis with the outer walls of the Outer Chassis, seating it within side walls A and B as shown in Figure 15.
- While pulling outwards on the Release Lever, slide the Inner Chassis towards the rear of the Outer Chassis until it latches at the rear of the Outer Chassis.

Loading Tickets into Feeding Mechanism

When loading new ticket stacks, be sure that there is power to the printer. The first ticket of the stack must be inserted into the printer by hand. The Epic 950 printers' ticket supply bucket is integrated with a guide to direct the ticket into the printer mechanism. Once the leading ticket enters the Top of Form sensor, the ticket will be automatically fed into the Printer Mechanism.

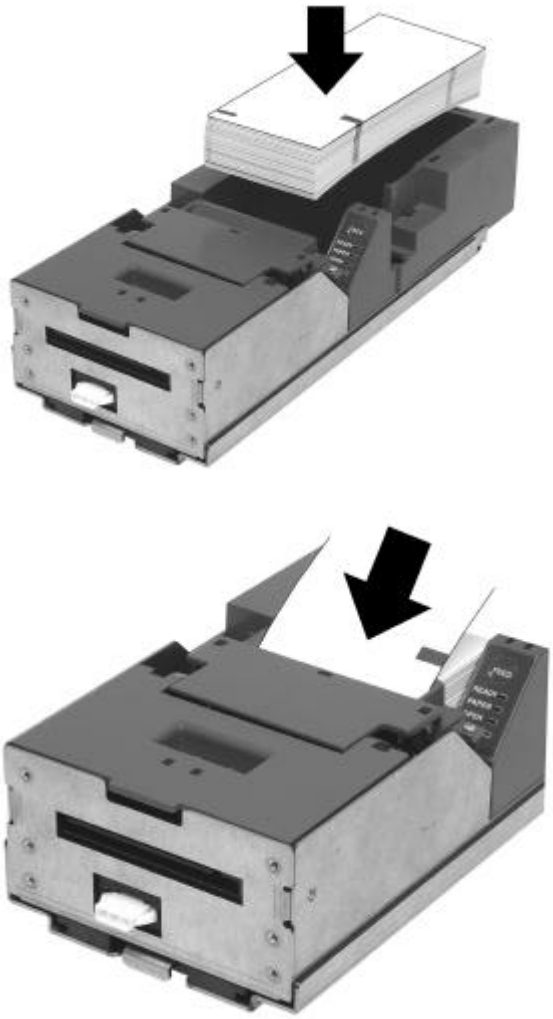

Figure 16. Ticket Loading and Ticket Feed Mechanism

Loading tickets into the ticket supply bucket: (Refer to the label on printer)

- Load tickets into the ticket supply bucket, making sure that the Black Dot is positioned as shown in Figure 16.

- Orient the tickets so that the Black Dot is towards the leading edge of the ticket.

Feeding tickets into the Printer Mechanism: (Refer to the label on printer)

- Check to ensure that the tickets have been placed in the ticket supply bucket with the proper black dot orientation.

- Insert the leading ticket into the Printer Mechanism's insertion guide area. The ticket should be inserted about a ½" into the mechanism; at this time, the machine automatically completes the feeding process.

- If printer has been slid out from rack, make sure that the printer is closed.

- The printer is ready to receive information.

Removing Loaded Tickets

The Epic 950 printers have two ways to remove unused tickets from the printer mechanism:

- The first way is to release the Ticket Cover by lifting and rotating backward, this will relieve pressure to the platen and tickets can be removed. This also will allow an opening that provides space to check the printer for ticket jams, or prepare the paper path for ticket replenishing.

- The second way is to use the feed button, which will feed out tickets from within the printer mechanism.

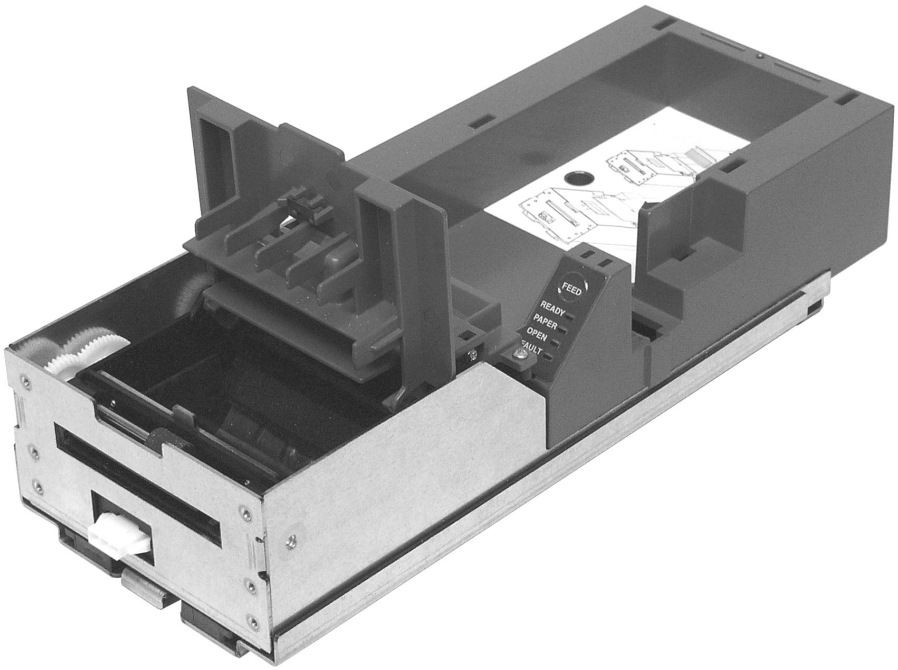

Figure 17. Ticket Cover Shown Open for Ticket Removal

Unloading Tickets from the Printer by opening the Ticket Cover

1. Pull Inner Chassis away from the Outer Chassis until it stops in the open position.
2. Lift and rotate the Ticket Cover backwards, towards the rear of the printer.
3. Remove all tickets from the ticket path and check for any debris.
4. Remove any remaining tickets from the ticket supply bucket.

5. Rotate the Ticket Cover into its original closed and latched (Magnetic) position.

Cleaning the Print Head

Two kinds of periodic cleaning operations will ensure continued high print quality from your Epic 950 printer:

1. Paper dust removal. Use a soft brush to clean the paper dust from inside the printer and chassis area. The paper dust should also be removed from the sensor optics.

2. Cleaning thermal print head. If streaking on the printed ticket is evident, the thermal print head may need to be cleaned. This can be done by inserting a thermal printer cleaning card, as shown in the instructions below:

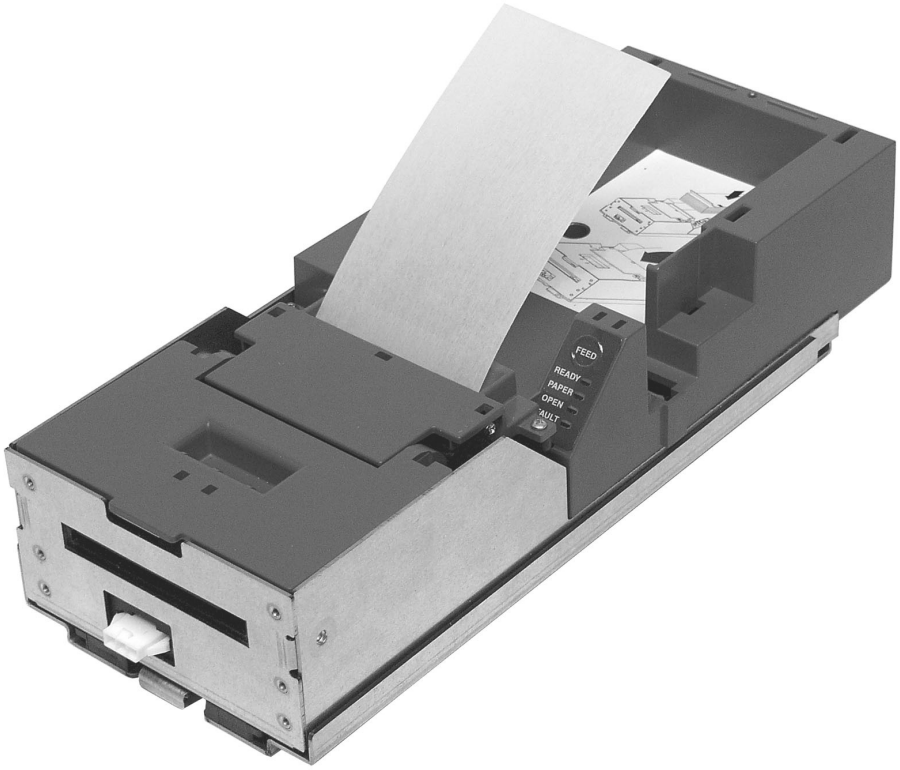

Figure 18. Cleaning the Print Head

Detailed instructions

1. Open the cover and remove all tickets from ticket feed path.
2. Close the cover.

3. Open cleaning card pouch and remove cleaning card.
4. Insert cleaning card into feed path.
5. The cleaning card will automatically be drawn into the feed path.
6. Open the cover and then remove the cleaning card by gently pulling it back.
7. Repeat process if necessary.
8. Properly dispose of used cleaning card.

Purchasing Cleaning Cards

Cleaning cards are available through TransAct – consult Chapter 1 for contact information by telephone or the Internet. Cards can also be purchased direct from Enefco International Ltd. at (888) 578-0141.

Description:	**Part Number:**
2.5" x 6" Thermal Cleaning Card (box of 25)	100-03322 (TransAct)
2.5" x 6" Thermal Cleaning Card (box of 25)	GTP250PB (Enefco)

Printing a Self-test Ticket

The Epic 950 printer has the ability to print a pre-defined self-test ticket, to test the normal printing functionality of the unit, and create a printout of the current printer configuration. To print a self-test ticket, perform the following steps:

1. Unrack the Inner Chassis.
2. Open the Ticket Cover. Do not remove a currently loaded ticket.
3. Press and hold the feed button until the Open LED goes out, then release this button.
4. Now close the Ticket Cover, and the self-test ticket will then print.
5. Close the Inner Chassis to resume normal operation.

Figure 19 shows an example of the information printed. Your printer may print more or less information, depending on the version and revision of the printer.

INSERT THIS SIDE UP

```
Model      : Epic 950TM
Firmware   : S00102
Date       : Jul 22 2004
S/N        :

Baud Rate: 9600 BPS
     8 Bit No Parity
     1 Stop Bit
Handshaking : XON/XOFF
Receive Error : Prints '?'
Code Page     : 437
Smoothing     : Enabled.
Bar Code Width: 3
Line Spacing  : 6.3 LPI
Mono Paper    : Custom Black
Gray Eo   : 0.12 mJ/sq.mm
Black Eo  : 0.24 mJ/sq.mm
Color Paper   : Custom Color
Color     : Black/Red
Color Eo  : 0.18 mJ/sq.mm
Black Eo  : 0.38 mJ/sq.mm
Density: 0
PreHeat : Off
```

INSERT THIS SIDE UP

Figure 19. Sample self-test ticket.

chapter 6

DIP Switch Settings

DIP Switch Settings

The majority of these dip switch operations are defined in the POR.INI file, as documented in the previous pages.

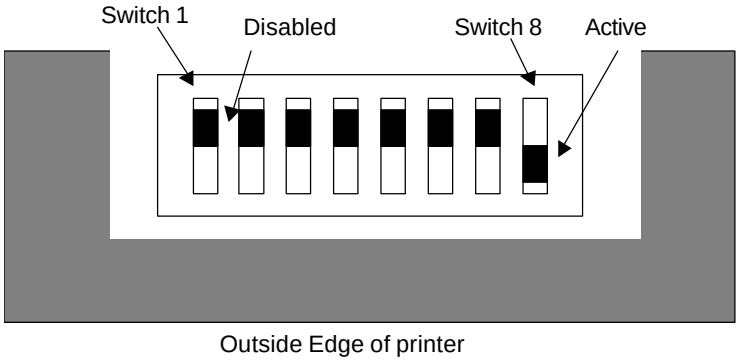

Switch 1 is the furthest to the back. The Active position is toward the outside edge of the printer.

Switch 1
Switch 1 is reserved and must be in the Disabled position. If activated, the printer will be held in reset.

Switch 2
Switch 2 configures Ticket Low. The Disabled position prevents ticket low from being detected.

Switch 3
Switch 3 activates Demo mode. It must be in the Disabled position for normal operation.

Switch 4
Switch 4 activates the Error log. This is useful for debugging but should not be on by default.

Switch 5
Switch 5 activates Com Save. This is also a debugging feature, and will be used with future TransAct tools to help debug printer operations.

Switch 6
Switch 6 is reserved

Switch 7
Switch 7 activates the Smart Suite features. This activates a mode of operation that is an enhancement of Series 800 emulation. It should not be activated when replacing a Series 800 printer. To see what features are available in the Smart Suite enhancements, refer to the Epic 950 Smart Suite Supplement. To activate the progress status features in the Demo program, you must turn this feature on.

Switch 8
Switch 8 activates 2-color operation.

chapter 7

Assembly/Disassembly

Precautions for Disassembly

Before disassembling any part of the printer, be sure the power is turned off. The Controller Board, Interface Board, and Slider Board can be damaged by static electricity. Observe ESD precautions. Wear a grounded wrist strap, and use a static mat or other protected work surface.

If installed within a game, this printer should be removed from the game prior to commencing any disassembly operations. Consult the Operating Procedures chapter of this manual for detailed instructions on how to unrack your Epic 950 printer.

Necessary Tools

The Epic 950 printer is designed to be disassembled into its major sub-assemblies with the use of a #2 Phillips Screwdriver.

Epic 950 OEM Variations Notice

This Epic 950 has most likely been incorporated into another Original Equipment Manufacturer's product. Due to this, your unit's design may vary from the specifications and options shown here. The content of this manual is reflective of the Ithaca Epic 950 Printer, including all of its available options. TransAct does not assume support responsibility for parts other than what is shown in this manual.

Remove Ticket Supply Bucket from Inner Chassis

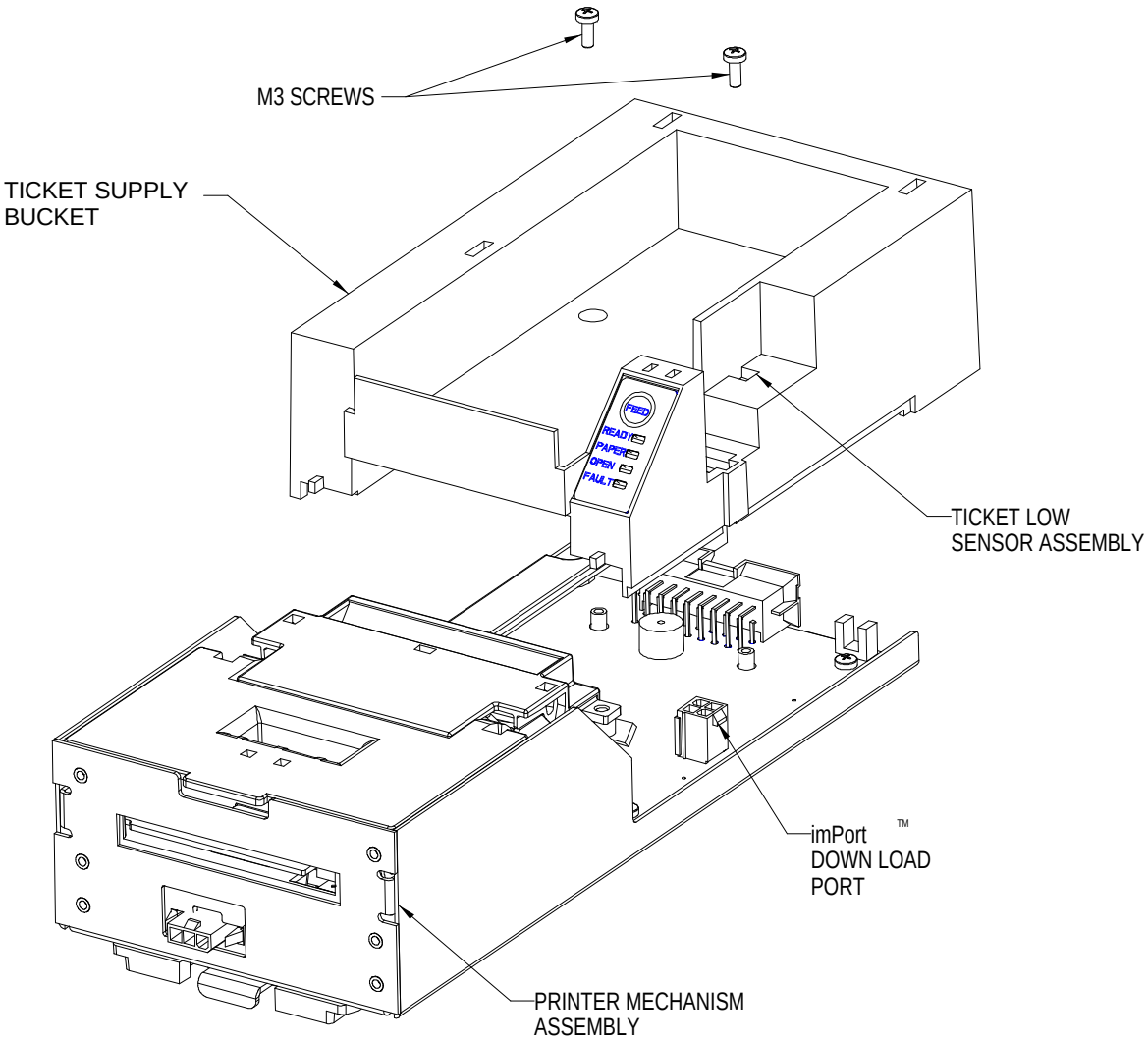

Figure 20. Remove Ticket Supply Bucket from the Inner Chassis.

- Loosen completely the two (2) M3 screws that retain the ticket supply bucket to the Outer Chassis.
- Lift the Ticket Supply Bucket away from the Inner Chassis.
- Unplug the Ticket Low Sensor Assembly and the Keypad Flex harness form the Main Controller PCB.
- Repeat the steps in reverse to re-install the Ticket Supply Bucket.

Remove Printer Mechanism from the Inner Chassis

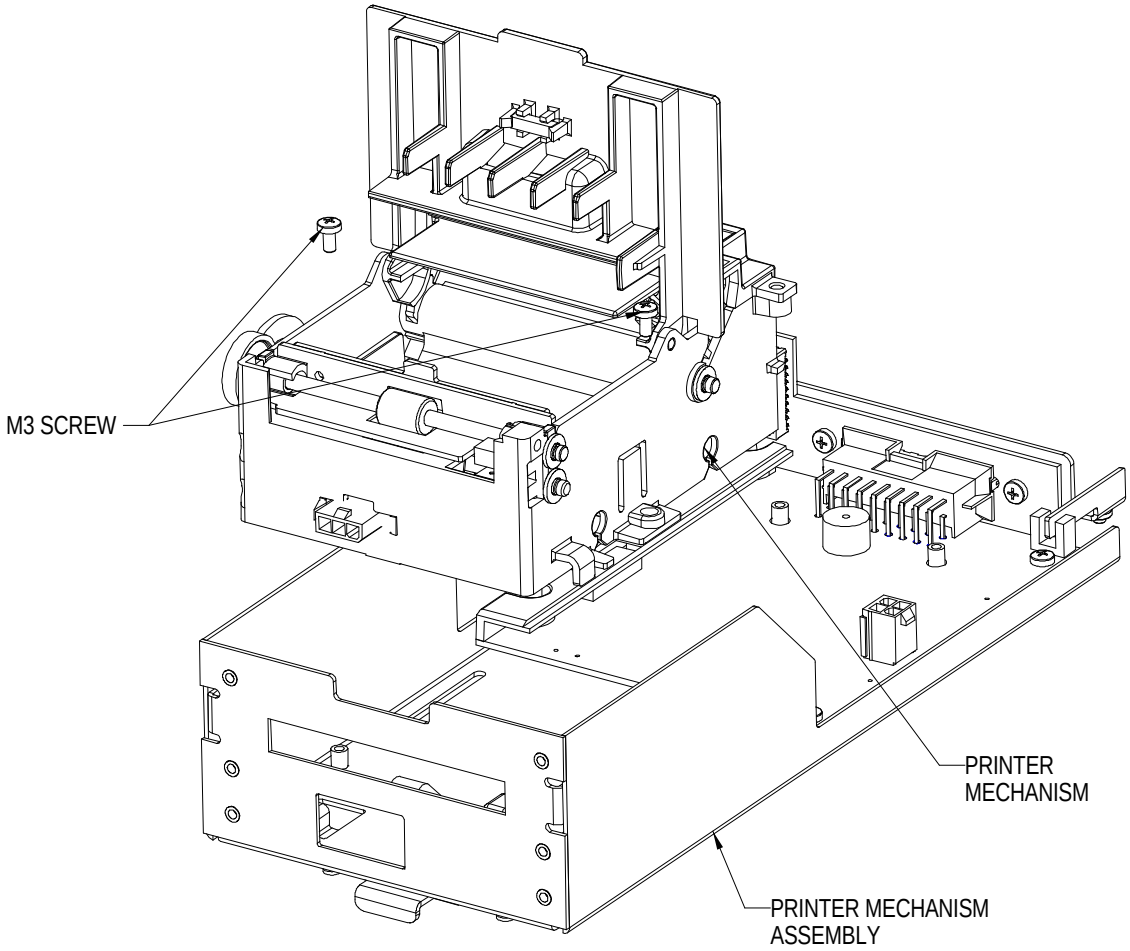

Figure 21. Remove Print Mechanism from the Inner Chassis.

- Unplug all Printer Mechanism connectors from the Controller PCB Assembly.
- Remove the two (2) M3 screws on each side of the Print Mechanism and remove.
- To re-install the Printer Mechanism, re-install all connectors to the Controller PCB Assembly.
- Move Print Mechanism back into place and tighten M3 screws.

Remove Controller PCB Assembly from the Inner Chassis

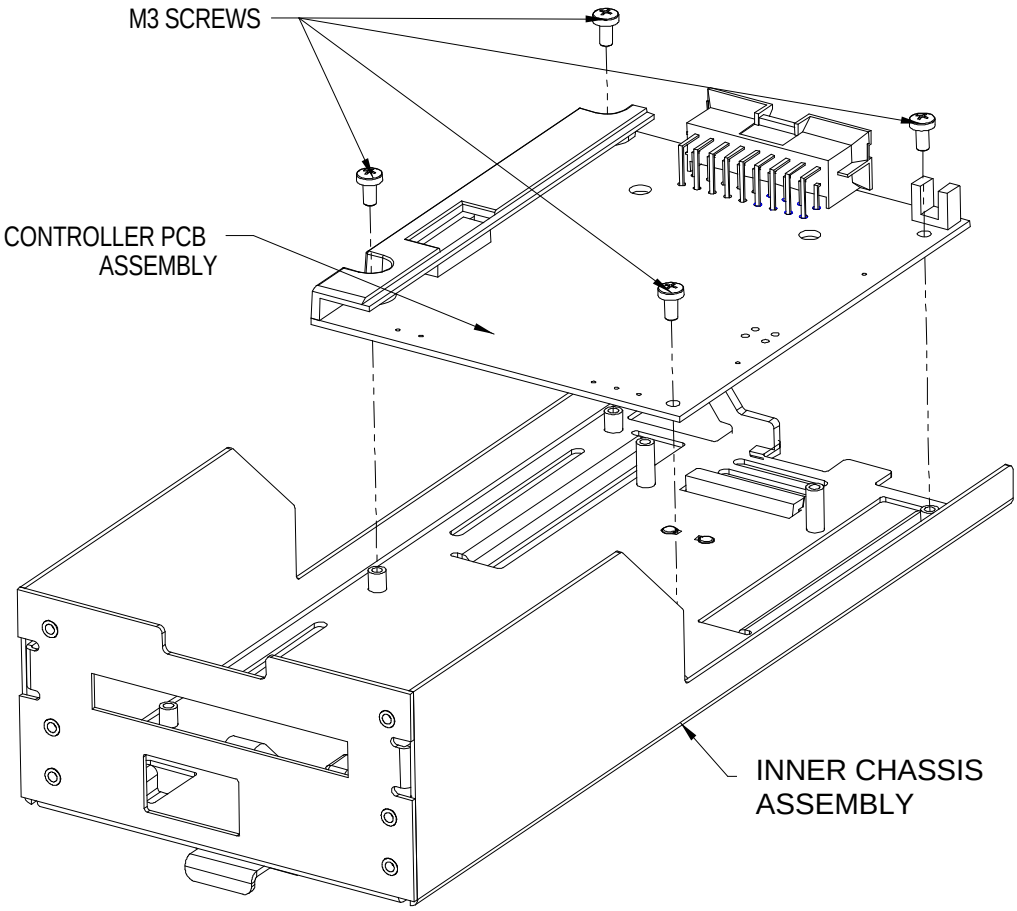

Figure 22. Remove Controller PCB Assembly from the Inner Chassis.

Remove/install Controller PCB Assembly by removing/installing the four (4) M3 screws that mount the board to the Outer Chassis.

Remove Interface PCB and Interconnect PCB Assemblies from the Outer Chassis

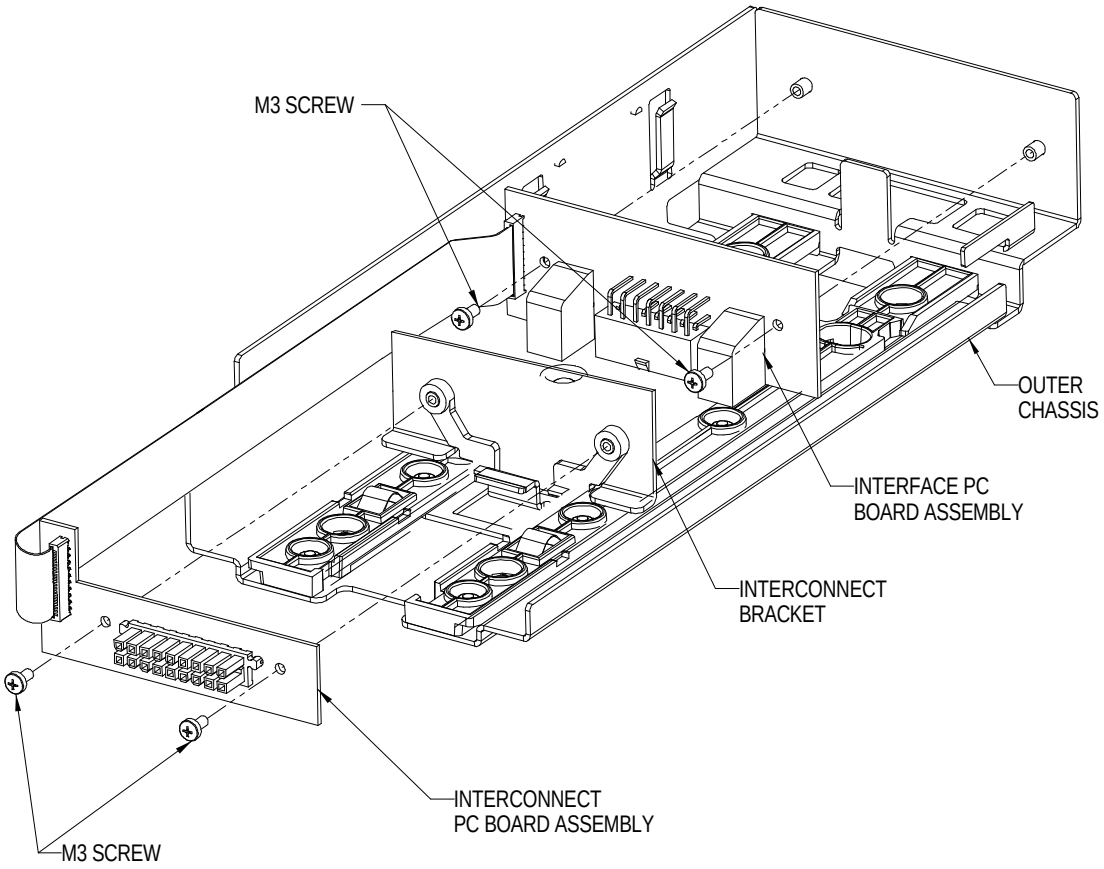

Figure 23. Remove Interface PCB and Interconnect PCB Assemblies from the Outer Chassis.

- Remove Interface PCB Assembly from Outer Chassis by removing two (2) M3 Screws with a #2 Phillips Head Screwdriver.
- Remove Interconnect PCB Assembly from Outer Chassis by removing two (2) M3 Screws with a #2 Phillips Head Screwdriver.

Firmware Download Port

The Epic 950 printer features an imPort™ firmware and graphics download port, as shown in the figure below. This port uses a 4-pin Molex connector with an RS-232 interface. For further details on this use of this proprietary download port, please contact TransAct Technical Support.

Note that the imPort™ firmware and graphics download port is NOT a power connection port. Attempting to supply power to the unit through this port may result in damage to the unit.

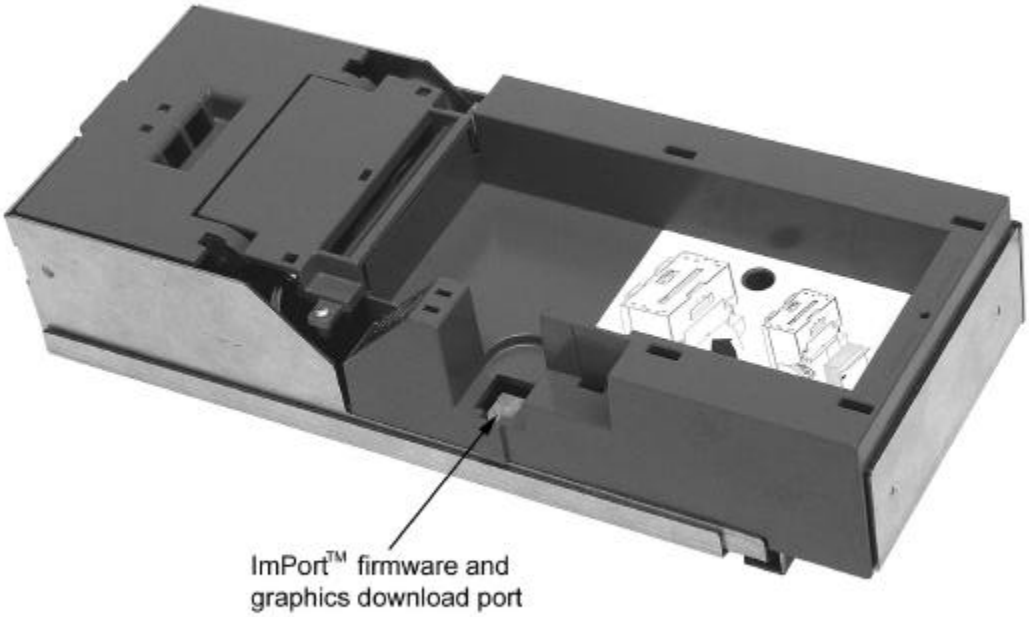

Figure 24. Firmware Download Port.

chapter 8

Parts List

Complete Epic 950 Assembly

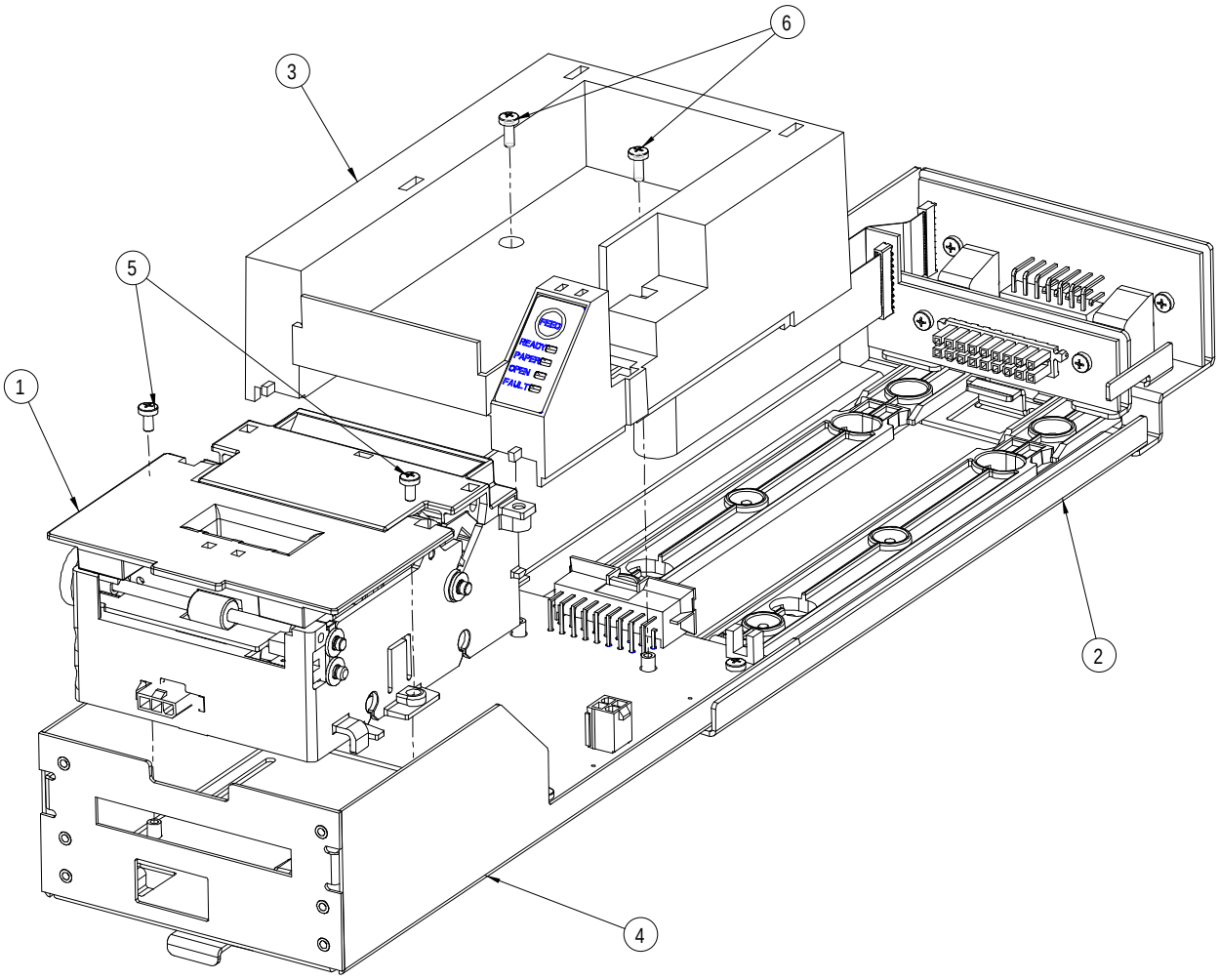

No.	Description (standard parts)	Part No. (History)
1	Print Mech Assy-STD	95-04899
2	Assy-Serial Outer Chassis	95-00938
2	Assy-Netplex Outer Chassis	95-00940
3	Assy-Ticket Supply Bucket	95-04850
4	Assy-Inner Chassis	95-04855
5	Screw M3 x 0.5 Phillips Panhead	98-0611
6	Screw M3 X 8mm Phillips Panhead	98-0897
7	Assy-400 Ct Extension/Label (not shown)	95-05614
7	Assy-600 Ct Extension/Label (not shown)	95-05615

* Not available as a spare part

Printer Mechanism Assembly

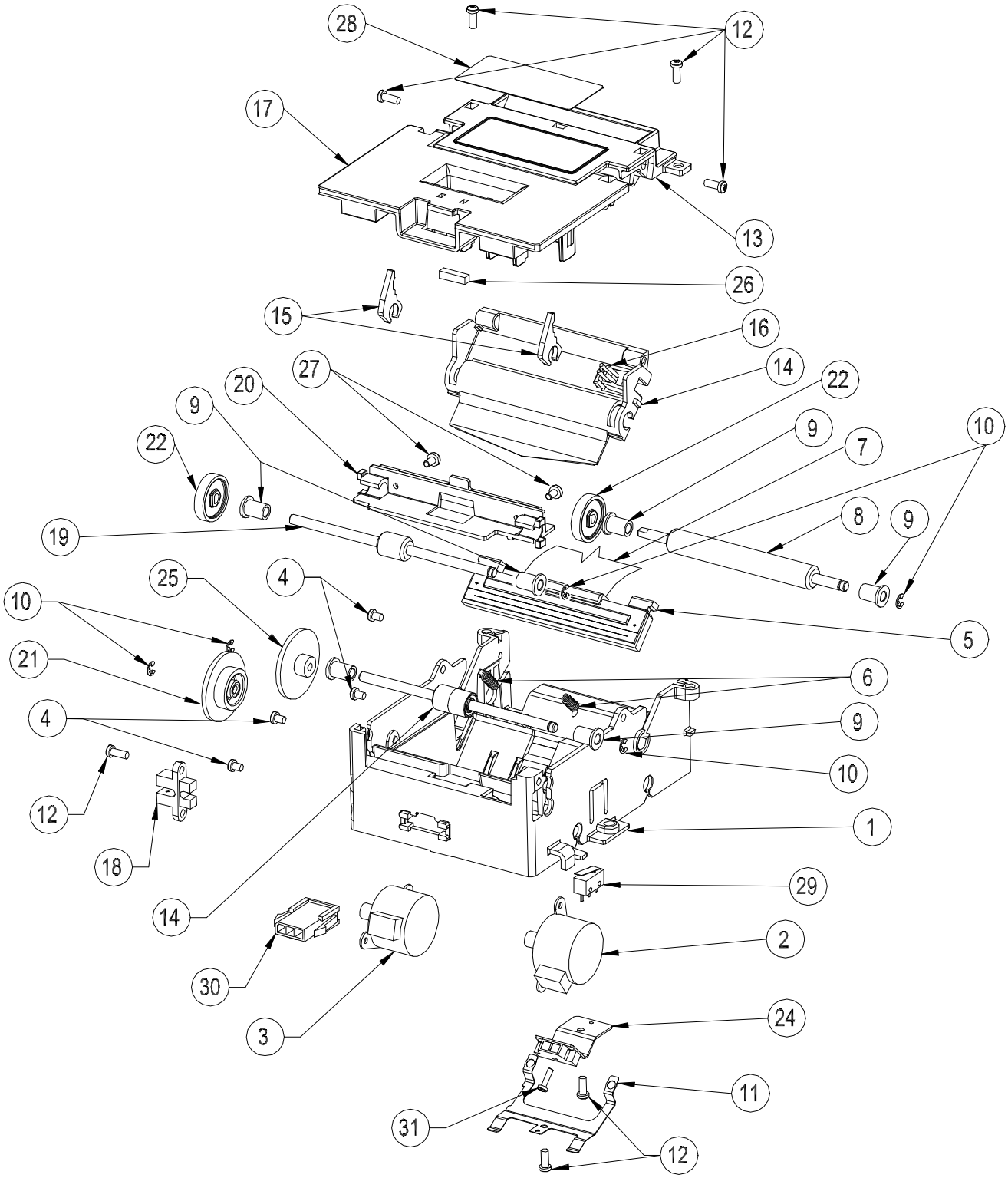

No.	Description (standard parts)	Part No. (History)
1	Frame Assembly	95-05694 (95-04978, 95-04961)
2	Motor Assemble - Feed	98-04312
3	Motor Assembly - Transport	98-04312
4	Screw –M2.5x5.6mm Phps Phd (sems)	98-04991 (M068161-01)
5	Heatsink Assembly	R95-04974 (95-04950)
6	Spring – Compression (Print head)	M068279-01
7	Cable - Printhead	28-04036
8	Platen	95-04901
9	Bearing	M068263-03
10	Ring-Retaining	520-9800003
11	Ground-ESD	95-04985 (95-04945)
12	Screw-Tapping #4-24	98-7608
13	Guide-Upper Entrance	95-04967
14	Cover-Platen	95-04979 (95-04905)
15	Lever-Platen Release	95-05881 (95-05837, 95-04915)
16	Sensor-Top of Form	95-05473 (95-05149)
17	Ticket Cover	95-05924 (95-04962, 95-04981,95-04980)
18	Sensor Assembly-Ticket Taken	95-05151
19	Drive Shaft Assembly	95-04903
20	Guide-Ticket Exit	95-04965
21	Gear-Idler (Transport)	95-04936
22	Gear-Drive	95-06326 (95-04949)
23	Roller Assembly-Idler	95-04914
24	Sensor Assembly-Burst	95-05150
25	Gear-Idler Drive	M068272-01
26	Magnet	98-6473
27	Screw-Tapping #4-24	98-04977
28	Label – Epic 950	95-05277
29	Switch-Cover Open	95-05153
30	Assy-3/3 pos harness	95-05154
31	Screw-M2x6	M068306-01

* Not available as a spare part

Outer Chassis Assembly

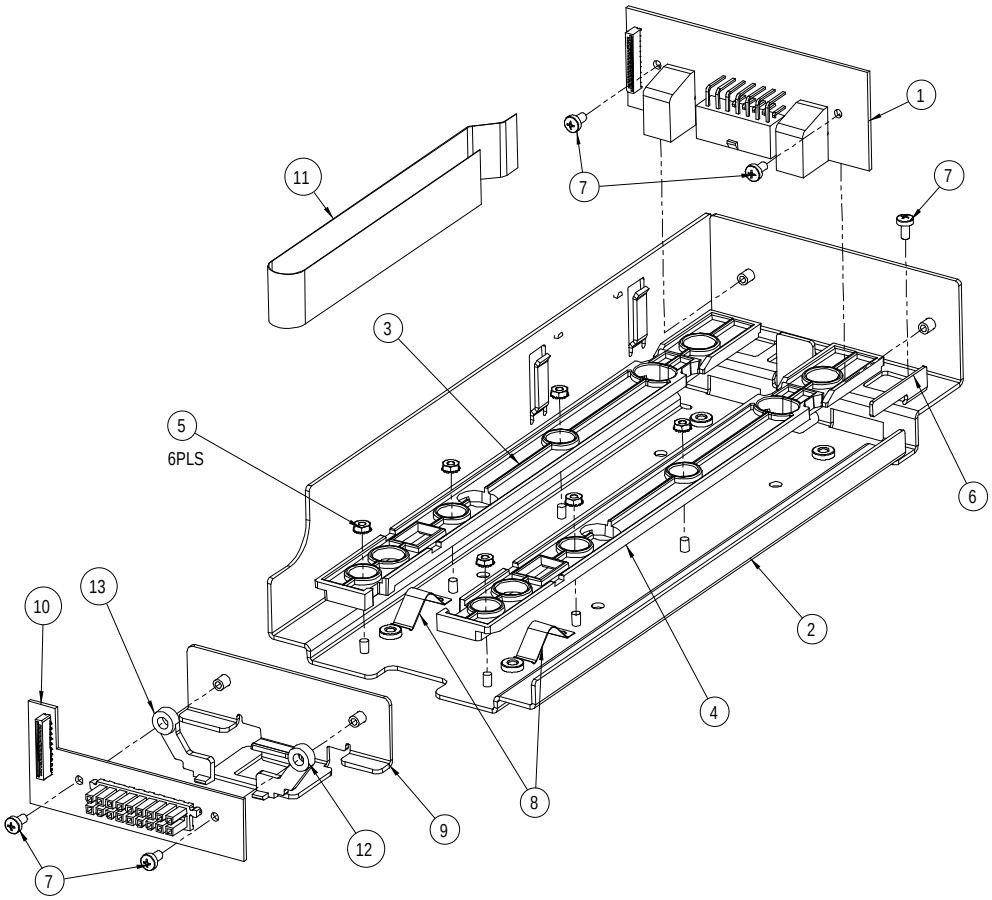

No.	Description (standard parts)	Part No. (History)
1	Assy-RS232 Interface PCB Assy-Netplex Interface PCB Assy- Dual Port RS232 Interface PCB Assy- Dual Port Netplex PCB Assy- Dual Port USB PCB Assy-I2C Interface PCB	95-04998 95-05001 95-05018 95-05022 95-05007 95-05004
2	Outer Chassis	95-04856
3	Rail-Slide (Left)	95-04883
4	Rail-Slide (Right)	95-04884
5	Nut-M3 Hex w/Lockwasher	98-0621
6	Bracket-Sensor Flag	95-04872
7	Screw-M3 x 0.5 PH	98-0611
8	Ground-Chassis	95-04879
9	Slide Intermediate	95-04857
10	Connector PCB	95-04995
11	Cable-21mm x 12”	98-05024
12	Latch-Slider (right)	95-04881
13	Latch-Slider (left)	95-04882

* Not available as a spare part

** Sales of these parts restricted to approved customers only

Inner Chassis Assembly

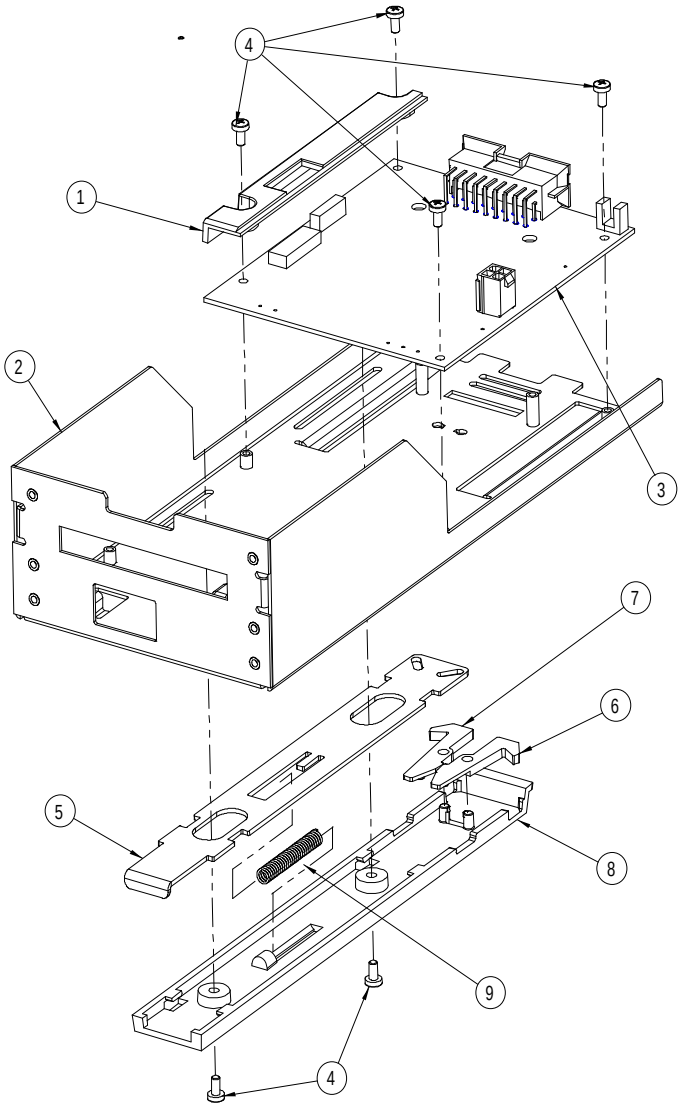

No.	Description (standard parts)	Part No. (History)
1	Assy-PCB Cover	95-05765 (95-04863)
2	Chassis-Inner	95-04885
3	Assy-Controller PCB	95-04992
4	Screw-M3 x 0.5 PH	98-0611
5	Lever-Release	95-04866
6	Latch-Release (right)	95-04891 (95-04873)
7	Latch-Release (left)	95-04890 (95-04868)
8	Housing-Release	95-04867
9	Spring-Compression	95-04870

* Not available as a spare part

Ticket Supply Bucket Assembly

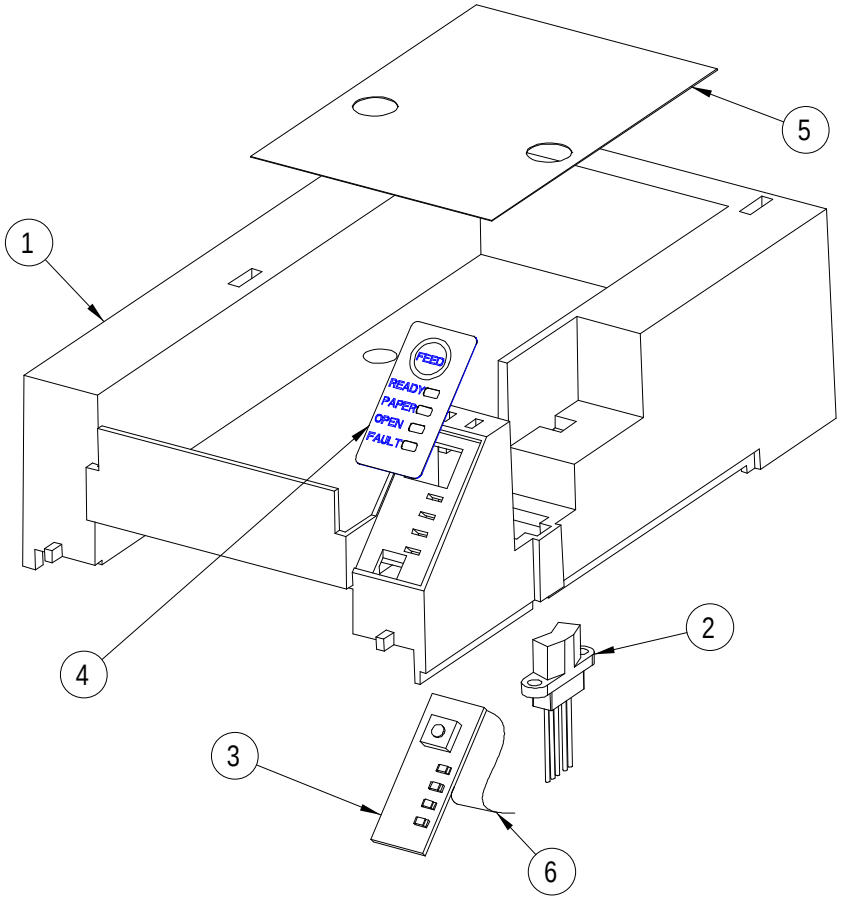

No.	Description (standard parts)	Part No. (History)
1	Bucket-Ticket Supply (200)	95-04849
2	Sensor Assembly-Paper Low	95-05151
3	Assy-Keypad PCB	95-05015
4	Overlay-Keypad	95-04862
5	Label-Ticket Loading	95-04880
6	Cable-Flex	98-05023

* Not available as a spare part